ITATA

ANNUAL REPORT 2000

One of the first pure holding companies of Brazilian open capital, Itaúsa - Investimentos Itaú S.A. controls the second-largest Brazilian private group in terms of volume of revenues. The Group operates in the areas of finance, insurance, industry (electronic information technology, electronics for consumer, wooden panels, brass bathroom fixtures, vitreous china products and chemicals) and real estate. The Itaúsa Group ended the year with assets of R$ 72.3 billion and a stockholders' equity of R$8.2 billion.

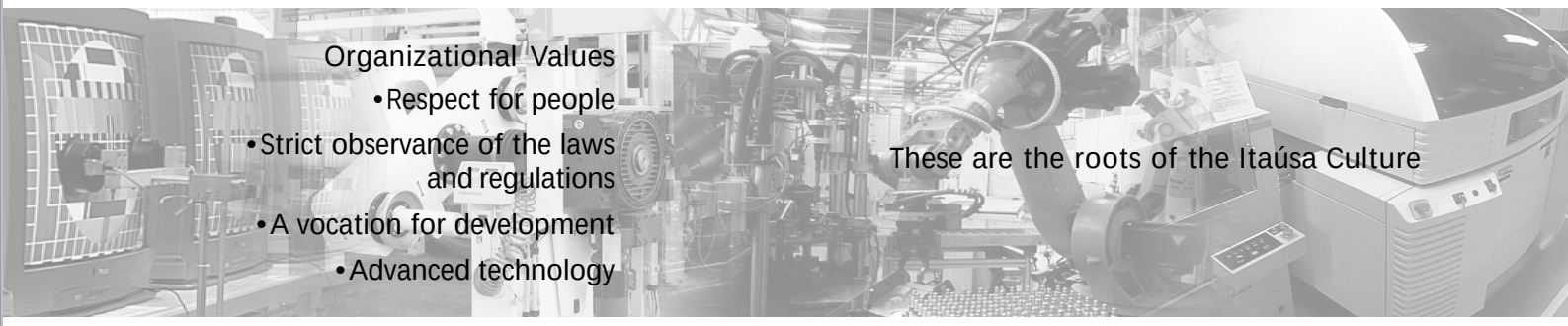

Organizational Values

- Respect for people
- Strict observance of the laws and regulations
- A vocation for development
- Advanced technology

These are the roots of the Itaúsa Culture

Its culture, allied to the principles of business management, such as a strict assessment of the various risks of the operation, emphasis both on technological capacity and on the training of intellectual capital, and the use of sophisticated techniques for monitoring the results, provided the Itaúsa Group with continuous advances, even in periods of macroeconomic difficulties.

All the companies of the Group have relied on these values for determining their procedures.

ITAÚSA

CONTENTS

Results 4

Principal Indicators of Companies Controlled by Itaúsa 5

Statements of Added Value 7

Message from the Management 8

Technology of the Itaúsa Companies 10

Management's Report/Technological Development

Banco Itaú 14

Duratex 22

Itautec Philco 32

Elekeiroz 42

Itaúsa Empreendimentos 46

Human Resources 50

Social, Cultural and Environmental Activities 54

Administrative Council and Board of Management 58

Corporate Information 59

Financial Statement Enclosure

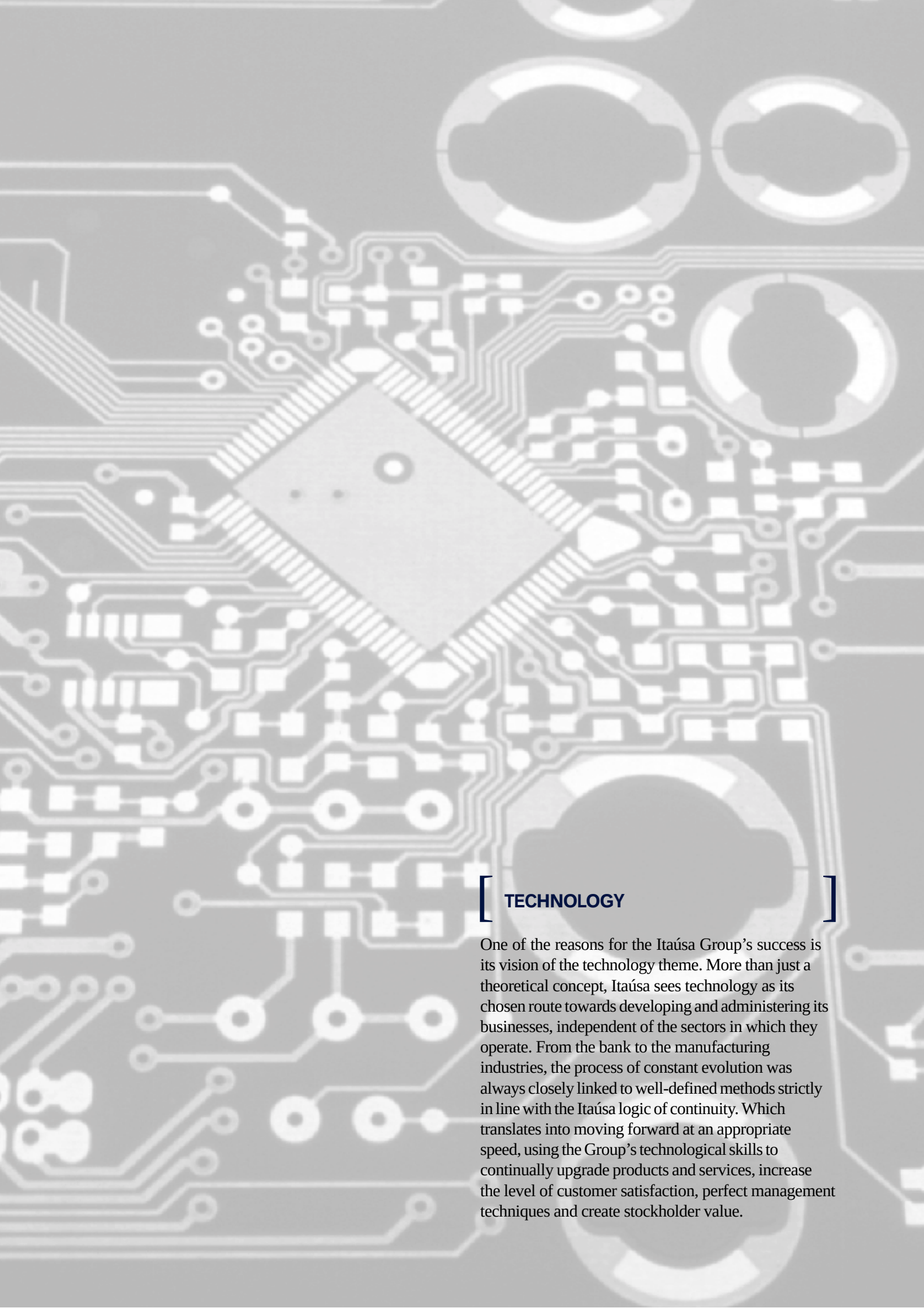

TECHNOLOGY

One of the reasons for the Itaúsa Group's success is its vision of the technology theme. More than just a theoretical concept, Itaúsa sees technology as its chosen route towards developing and administering its businesses, independent of the sectors in which they operate. From the bank to the manufacturing industries, the process of constant evolution was always closely linked to well-defined methods strictly in line with the Itaúsa logic of continuity. Which translates into moving forward at an appropriate speed, using the Group's technological skills to continually upgrade products and services, increase the level of customer satisfaction, perfect management techniques and create stockholder value.

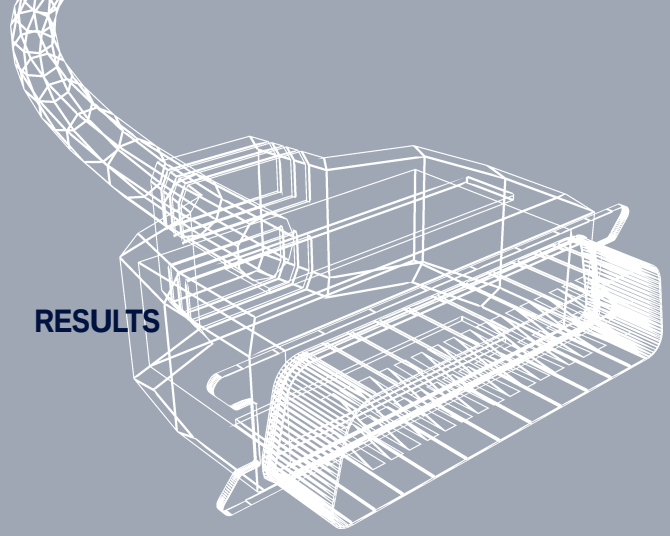

RESULTS

FINANCIAL HIGHLIGHTS OF THE HOLDING COMPANY AND THE ITAÚSA CONGLOMERATE

R$ thousand

	Year	Controlling Co.	Minorities	Conglomerate
Total Net Income	**2000**	**882,455**	**1,001,492**	**1,883,947**
	1999	951,105	1,003,526	1,954,631
• Recurring Net Income	2000	1,002,517	1,033,696	2,036,213
	1999	813,718	874,941	1,688,659
• Extraordinary Net Income	2000	(120,062)	(32,204)	(152,266)
	1999	137,387	128,585	265,972
Stockholders' Equity	**2000**	**4,114,261**	**4,130,460**	**8,244,721**
	1999	3,476,296	3,585,291	7,061,587
Return (ROE) (%)	**2000**	**21.45**	**24.25**	**22.85**
	1999	27.36	27.99	27.68
Dividends / Interest on Capital	**2000**	**333,164**	**342,173**	**675,337**
	1999	250,663	328,089	578,752

Itaúsa results for 2000

Itaúsa reported a consolidated net income of R$ 882.5 million for the fiscal year, with a return of 21.5% on a consolidated stockholders' equity of R$ 4,114.3 million. The recurring net income of R$ 1,002.5 million showed a growth of 23.2% over 1999.

The consolidated net income per thousand shares of Itaúsa's capital stock was R$ 296.83, while the book value came to R$ 1,383.89.

At the end of 2000, the preferred shares of Itaúsa were trading at R$ 1.93 per share, an appreciation of 3.2% during the year, particularly notable given that the Bovespa Index (Ibovespa) reported a depreciation of 10.7% over the same period.

PRINCIPAL INDICATORS OF COMPANIES CONTROLLED BY ITAÚSA

R$ thousand

		Financial Area		Industrial Area			
	Year	Banco Itaú S.A. (Consolidated)	Insurance Private Pension Plan and Capitalization (1)	Duratex	Itautec Philco	Elekeiroz	Consolidated/ Group (2)
Total Assets	2000	69,554,780	6,024,180	1,448,240	728,753	208,956	72,284,373
	1999	51,910,982	5,020,639	1,110,649	594,725	188,891	53,989,134
Operating Revenues (3)	2000	15,292,037	3,028,072	744,596	1,168,999	115,283	17,385,901
	1999	15,647,953	2,649,207	654,119	884,995	93,766	17,374,001
Net Income	2000	1,840,568	464,975	66,654	60,149	12,018	1,883,947
	1999	1,869,363	491,384	10,121	20,302	16,553	1,954,631
Stockholders' Equity	2000	6,642,077	2,857,537	849,755	278,045	146,057	8,244,721
	1999	5,906,672	2,438,934	614,445	235,169	138,039	7,061,587
Return (ROE) %	2000	27.7%	16.3%	7.8%	21.6%	8.2%	22.9%
	1999	31.6%	20.1%	1.6%	8.6%	12.0%	27.7%
Permanent Assets	2000	3,196,852	2,188,724	724,044	180,168	110,951	4,227,719
	1999	2,939,285	1,998,284	659,853	149,293	87,035	3,804,667
Investments in Period	2000	2,362,056	80,680	138,901	59,395	31,435	2,571,495
	1999	801,590	324,652	65,362	54,375	8,562	908,115
Internal Cash Generation (4)	2000	4,412,985	297,760	141,507	94,045	18,786	4,548,042
	1999	3,269,170	488,068	82,870	98,767	23,169	3,359,355
Dividends Paid	2000	628,764	115,349	21,498	17,273	3,359	675,337
	1999	602,470	266,555	15,142	6,032	4,315	578,752
Salaries	2000	2,239,249	94,036	163,013	152,224	14,555	2,588,611
	1999	2,108,122	94,825	143,878	131,490	13,781	2,417,581
Non-compulsory Employee Benefits	2000	183,479	11,996	10,442	4,051	1,320	200,491
	1999	177,585	8,856	12,560	1,687	1,095	193,969
Nº of Employees	2000	47,524	2,047	5,792	4,930	399	58,850
	1999	39,011	1,699	5,820	4,194	400	49,599
Taxes Paid and Provisioneds	2000	1,007,719	99,334	164,006	130,219	16,679	1,341,252
	1999	884,257	106,489	117,970	103,580	12,054	1,140,174

(1) The data relating to Banco Itaú's insurance companies, private pension plan and capitalization companies is also shown separately in order to distinguish each entity.
(2) The data for the consolidated figures/conglomerate shows values net of eliminations on consolidation and unrealized intercompany operations.
(3) According to world tendencies, Operating Revenues as per area of activity were obtained as follows:
- Banco Itaú S.A.: the sum of Income from Financial Operations, Banking Services Fees, Premiums from Insurance, Capitalization and Private Pension Plans and other Operating Income.
- Insurance, Private Pension Plan and Capitalization: consider Income from Insurance Premiums, Capitalization, Private Pension Plans, Financial Income and Capital Gains.
- Duratex, Itautec Philco and Elekeiroz: consider Net Revenues from Sales of Products and/or Services

(4) Includes resources from the operations:
- plus expenses for provisions for non-performing credits;
- not considering variations in the mathematical provisions for capitalization and pension plans, but considering the variations in insurance claims to be settled, credits and debits relating to insurance operations and deferred expenses on the sale of insurance, pension plans and capitalization.

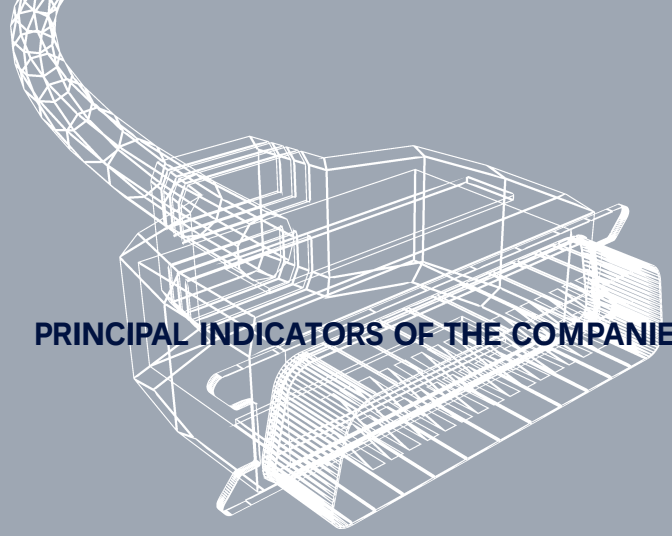

PRINCIPAL INDICATORS OF THE COMPANIES CONTROLLED BY ITAÚSA

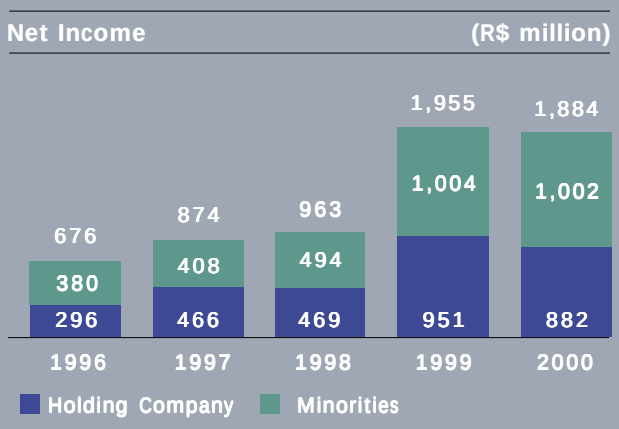

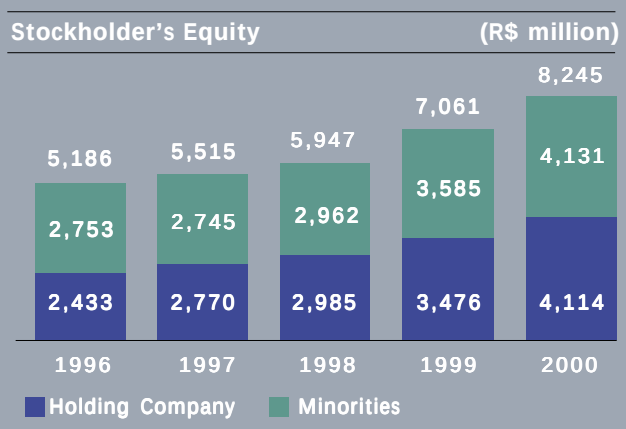

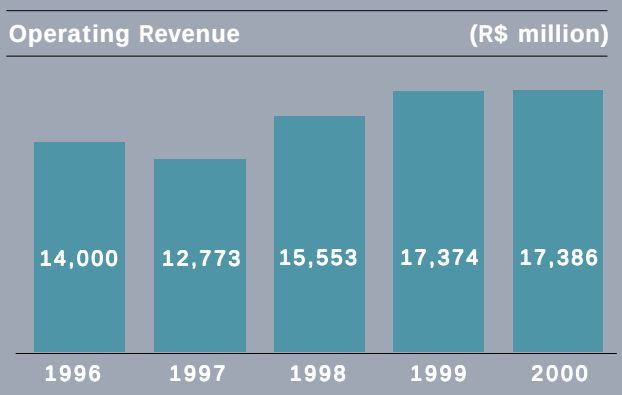

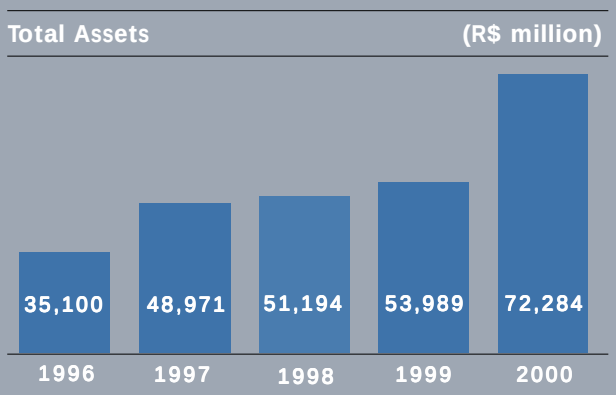

RESULTS					
	1996	**1997**	**1998**	**1999**	**2000**
Net income per batch of 1,000 shares of theHolding Company (R$)	94.66	149.04	154.16	327.42	296.83
Book value per batch of 1,000 shares of the Holding Company (R$)	778.84	886.78	981.16	1,196.71	1,383.89
Return on equity (ROE) %					
Holding Company	12.2	16.8	15.7	27.4	21.5
Minorities	13.8	14.9	16.7	28.0	24.3
Group	13.0	15.8	16.2	27.7	22.9
Dividends/Interest on Capital (R$ million)					
Holding Company	62.5	121.4	208.6	250.7	333.2
Minorities	91.2	208.8	192.1	328.1	342.2
Group	153.7	330.2	400.7	578.8	675.4

STATEMENT OF ADDED VALUE

R$ thousand

	2000 Value	2000 Share (%)	1999 Value	1999 Share (%)
Sales of Products and Services Net of the Cost of Materials, Outsourced Services and Others (A)	**4,384,755**	-	**3,914,411**	-
Income from Financial Operations (B)	4,322,527	-	3,875,830	-
Income from Insurance Operations (C)	**381,329**	-	**281,108**	-
Other Operating Income / Operating Expenses (D)	(2.972.846)	-	(2.058.727)	-
Value Added (E = A + B + C + D)	**6,115,765**	-	**6,012,622**	-
Remuneration from Labor (F) (*)	2,440,643	39.9	2,309,171	38.4
Remuneration from the Government (G)	**1,689,711**	**27.6**	**1,442,553**	**24.0**
Dividends to the Shareholders (H)	675,337	11.0	578,752	9.7
Controlling Company	333,164	5.4	250,663	4.2
Minority Shareholders	342,173	5.6	328,089	5.5
Remuneration of Financing in the Industrial Area (I)	**101,464**	**1.7**	**306,267**	**5.0**
Reinvestment of Income (J)	1,208,610	19.8	1,375,879	22.9
Controlling Company	**549,291**	**9.0**	**700,442**	**11.7**
Minorities	659,319	10.8	675,437	11.2
Distribution of Added Value (K = F + G + H + I + J)	**6,115,765**	**100.0**	**6,012,622**	**100.0**

(*) Does not include social security charges

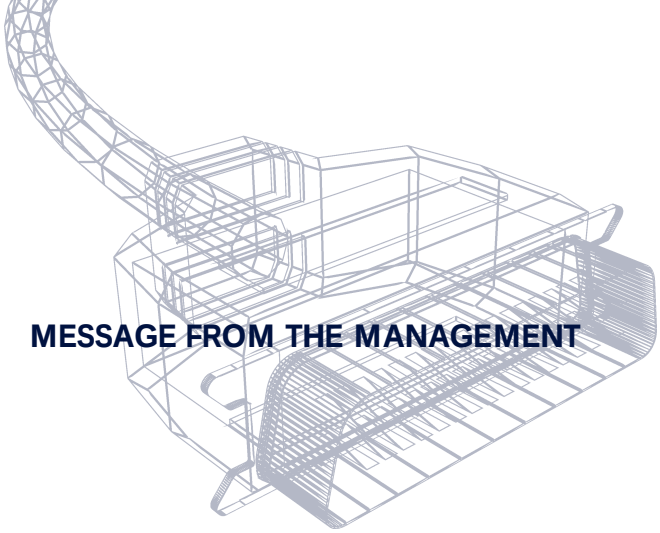

MESSAGE FROM THE MANAGEMENT

A company's foundations are built on its organizational culture and especially upon its values.

Since their beginnings, the companies in the Itaúsa group have based their activities on values of respect for the human being, strict fulfillment of the laws and regulations and an unceasing quest for development. These values are the very roots of our corporate culture.

This culture has enabled the companies led by Itaúsa to show strong and consistent advances year after year. However, this success has been achieved, not only thanks to the Group's culture, but also due to principles of business management, including such factors as a critical analysis of the various operational risks, the emphasis not only on technological capacity, but also on the development of intellectual capital and the use of sophisticated techniques for monitoring results.

The impact of these advances has been felt especially in the technological field – enabling us to become market leaders in different sectors of our business. The strategy that we have adopted – giving top priority to our own development and the absorption of the most modern technology in all our various areas of endeavor – has produced excellent results. Certainly, this will remain a constant feature of the Group in the future, since we do not intend to deviate from this principle: it is our corporate creed that technological advances – involving constant improvement and innovation – are the source of organizational growth and competitive advantage, which are reflected in premium performance and the creation of value for both shareholders and customers.

It is people who generate technological development to form part of the accumulated knowledge of mankind. That being the case, it goes without saying that the Itaúsa Conglomerate's technological innovation is supported by a consistent program of training and development of people. In 2000, the Group invested R$ 35.1 million in educational, training and development programs.

Itaúsa's focus is underlined by its capital expenditure: over the last five years, our investments in technology and development comprising fixed investment and expenditure amounted to R$ 4.1 billion. In 2000 alone, the sum dedicated to this area reached R$ 1.2 billion.

An important part of these investments are those used in information technology and telecommunications, but also directed towards technological development of products and processes, not only in the financial but also in the industrial area.

The financial sector of the conglomerate, led by Banco Itaú S.A., today the bank with the highest market capitalization anywhere in Latin America, accounts for the lion's share of capital expenditure: R$ 3.3 billion over the past five years, of which R$ 911 million in 2000 alone.

If the absolute value for the financial sector is impressive, the relative values dedicated to the industrial area indicate proportionally even higher levels of capital expenditure. In 2000, investments in technology and development in the financial area represented 13.7% of stockholders' equity at the end of the fiscal year, while the same coefficient reached 19.2% in the industrial area of the Group. These same proportions have been a constant feature over the past five years.

It should be remembered that, in these same five years, Brazil faced a succession of varied scenarios beginning with a vigorous process of stabilization of the domestic economy against a background of the opening-up of the market to international competition to be followed by the crises in Mexico, Asia and Russia, the adoption of a floating foreign exchange rate down to the present time when local economic fundamentals are proving to be the most solid for the past forty years. In spite of the variations in the economic climate, Itaúsa was able to adapt to the changing scene, never once contemplating a reduction in its capital expenditure plans and with an unshaken confidence in the development of the country.

Thanks to this, Banco Itaú now operates with the most advanced technology compared even to the major world banks; it is also because of this that Itautec today enjoys the competitive advantages enabling it to participate in various sectors of banking and commercial automation and micro-information technology, both in Brazil and also in various overseas markets. Philco, in turn, has developed its own skills in the area of digital electronics, incorporating in its consumer products all the most recent advances in world technology.

Already in 1999, Itautec Philco had been highlighted by the trade magazine "InfoExame" as the company that invested most in the technological development in Brazil (in that year, US$ 20 million).

At Duratex, the Wood Division has excelled in the continuous innovation in products and processes, not only in the area of industrialization of wood, but also in the reforestation segment. The DECA Division producing metal and ceramic sanitary products also reported a major success during the year with the launching of its HydraFlux flushing valve. This new product received the "State Governor's Award – Brazilian invention category" for its impressive water-saving qualities, unequaled in the market. In the chemical product area, Elekeiroz, made significant advances in manufacturing processes, which enabled it to increase production and at the same time improve quality and introduce measures for major cost savings.

The Itaú Cultural Institute has already established itself as a benchmark in the development, preservation and propagation of Brazilian culture: its hallmark is the association of the conglomerate's strong technological bent with the fascinating diversity of our culture, giving it the vigor to move forward while, at the same time, leaving the enduring stamp of its activities for posterity.

The results in 2000 are confirmation of the correctness of the Group's strategy. The Itaúsa conglomerate reported total consolidated net income of R$ 1,884 million, a return of 22.9% on consolidated equity of R$ 8,245 million. Recurring net income of R$ 2,036 million grew 20.6% compared with 1999. The controlling company reported R$ 882 million, with a return of 21.5% on net consolidated equity of R$ 4,114 million.

The group is planning capital expenditure in 2001, which will have a major impact on the future earnings stream of the Itaúsa companies.

At Banco Itaú, we shall be expanding our branch network and further developing the process of market segmentation by the implementation of a new commercial structure specialized in servicing the important small business segment; the network of Personnalité branches will also be expanded, thus giving Itaú a greater competitive edge in the segment of high net income individuals. The Internet channel, which has enjoyed accelerated growth rates, will be given priority through continual improvements in the supply of products and services, the segmentation of sites and above all, through strategic partnerships. The latter will be the key to Banco Itaú retaining its exclusive focus on the financial sector.

In the Industrial Area, Duratex's Wood Division is completing a new plant with a production capacity of 400,000 m^3 of medium and high-density fiberboard and is doubling its output of wood conglomerates from 180,000 to 360,000 m^3/year at its Itapetininga-SP site; the Deca Division is in the final stages of expanding capacity for the production of sanitary ceramic fixtures from 210,000 to 265,000 thousand units / month and metal sanitary items from 1 million to 1.2 million/ month. Itautec Philco will continue in its development of digital TV and will be developing the products, which build in the convergence between information technology and consumption (with particular emphasis on interactive TV). The company will be launching a line in PDAs (*personal digital assistants*), as well as new microcomputers with Pentium 4 processors and new notebooks. Capacity at the Tatuapé plant will have its production capacity for microcomputers and insertion of SMD components duplicated, while production of memories and its *multilayer* printed circuit boards at the Itaucom Jundiaí plant will be doubled. Elekeiroz is expanding its formaldehyde plant and building a new factory for the production of urea-formic aldehyde, used for resins in the production of fiberboard. Elekeiroz is also automating and revamping its phthalic anhydride plant, while renewing the corporate data processing system, thus allowing automated access to the data bases and the implementation of electronic commerce with customers and suppliers.

Built on technological bases with such potential, we are convinced that the companies in the Itaúsa Group will continue to grow from strength to strength over the coming years. It is for this reason that the technological theme is a common thread throughout this report.

The following pages expound in detail the achievements of the year. Under each heading, we are careful not only to show our results – very significant results – but also to inform our stockholders, customers and the public in great detail of the technological factor as a key corporate value for the companies comprising the Itaúsa Group.

With our sincere thanks

São Paulo, March, 2001

Olavo Egydio Setubal
Chairman

A NOTE OF GRIEF

It is with immense regret that we record the death on April 18, 2001, of Dr. Eudoro Villela, president of the Administrative Council of Itaúsa. He was an outstanding figure in the Group, as founder of Duratex, president of Banco Itaú between 1961 and 1975 and active counselor of the largest companies of the Group.

His biography shows an impressive work done in the entrepreneurial field and in medicine, having rendered important services to society as a researcher. Special mention deserves to be made of his time with the Curie Foundation, where he worked under the direct guidance of Madame Curie.

Recognizing the much that we owe him, we emphasize the immensity of the loss that his absence represents for all of us.

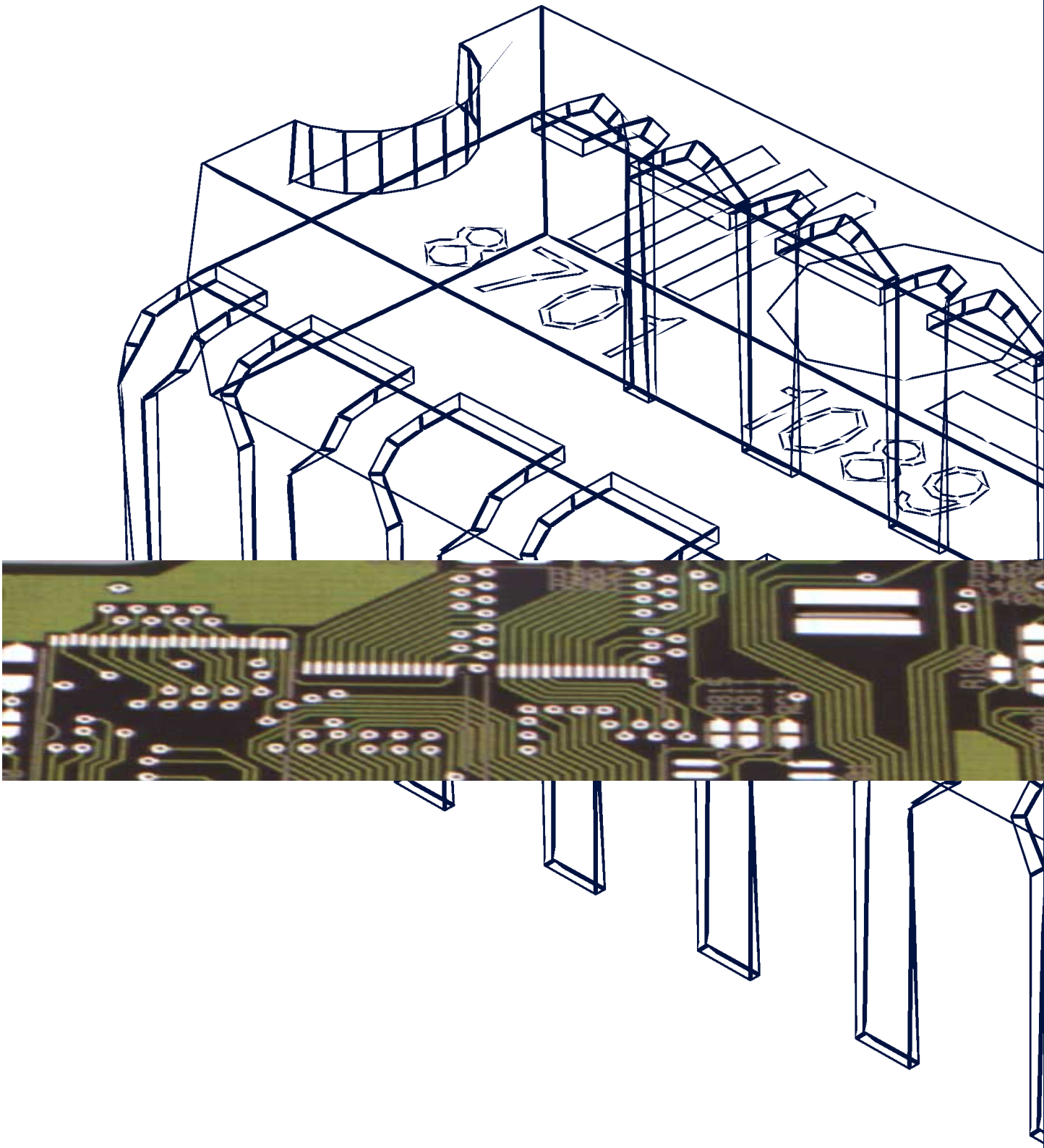

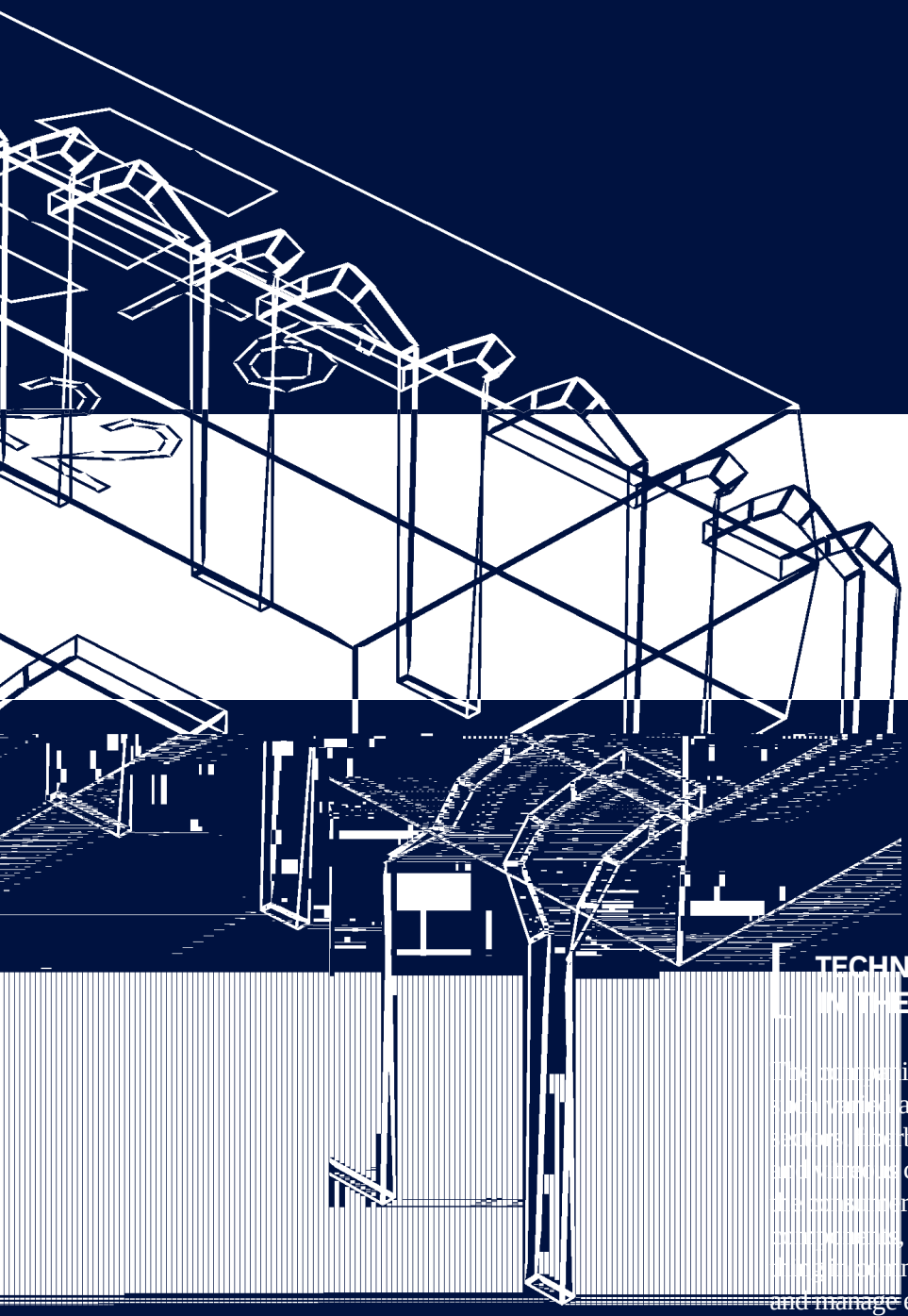

TECHNOLOGY IN THE ITAÚSA COMPANIES

The companies of the Itaúsa Group, which operate in such diverse areas as the financial and real estate sectors, cardboard paneling, brass bathroom fixtures and fittings, china products, chemicals and electronics, the consumer goods sector, information technology, [illegible], services and the Internet all have one thing in common: the Itaúsa vision as to how to develop and manage each one of its businesses. The principles of enrichment of human capital, business ethics and creation of stockholder value in a continuous and sustained form are the hallmark of all the Group companies. These principles are the foundation of the Group's ability to compete through the continued improvement in the quality of goods and services. For all this, technological development is a *sine qua non*. For managing and for innovation. That is Itaúsa.

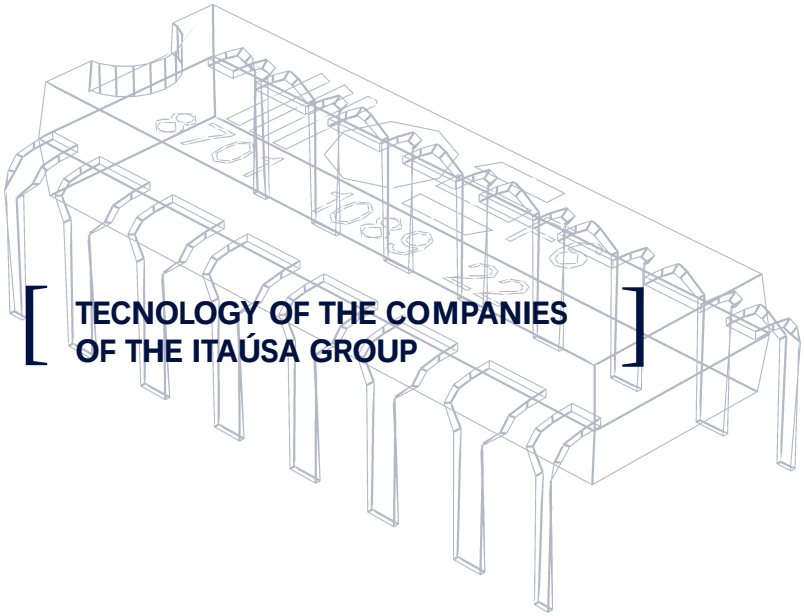

TECNOLOGY OF THE COMPANIES OF THE ITAÚSA GROUP

At Banco Itaú, the need for efficient and nimble control of operations demands the knowledge, development and the domination of all that is most modern in information technology and management skills. The development of software was always a key area of the Bank, because its business ia above all focused on information. An institution that controls financial resources needs to find ways of precisely informing those parties involved in an operation which, in the final analysis, is the essential product the customer is to receive. The banking product is transformed into an immense volume of information, which flows through uniform and compatible systems, the processing of which is centralized – and its integrity totally guaranteed.

At one and the same time conservative and aggressive, Itaú is today the bank with the highest market capitalization in Latin America. However, in the same way, the ability to meet successfully the daily challenges of business has enabled the other companies in the Itaúsa Group to reach the same respected levels as leaders in each of their own business fields: the new product launches of Itautec-Philco; the gains in productivity and quality of Duratex's forest reserves; the ingenious water-saving Hydra valves and the functional design of Deca's brass bathroom fixtures and vitreous china products and the innovative processes of Elekeiroz – all these speak for themselves.

Throughout the industrial area, the knowledge of processes and the transformations are the driving force behind the success of the products and services that are the trademark of Itaúsa's companies. Allied to attention to the theoretical concepts, at each of the Group companies, the Itaúsa way of doing business is fundamental for developing the wealth of experience in understanding each one's specific business in detail. From the bank to the

manufacturing industries, the rule has always been to move forward, meticulously evaluating the necessary adaptations to the new processes as part of the Itaúsa logic of continuity. Because a well administered process facilitates the absorption of new technologies and the institutionalization of the intellectual capital. The Itaúsa Group has learnt that technology is sophisticated and methodical. Which is to say that its implementation involves not only research and continuous innovation, but also well-defined methods.

Whether in the financial or industrial sector, the Itaúsa companies dominate the process chain of their businesses and have a profound knowledge of their technical and operational aspects. And they are aware that they must operate in environments, which motivate trained professionals because, in the final analysis, their most important capital is people.

At the Itaúsa Group, continuity and centralized control have never been obstacles for maintaining consistency of evolution; equally they never created difficulties for the development and adoption of state of the art technology. Everything in its own time and at an appropriate speed, the organization seeks to maintain the results of its successes, the existing data bank of knowledge and accumulated experience.
In other words, in the Itaúsa companies, technology is used in favor of the products, the customers, and the management of the Group and the stockholders. For this reason, the Group is made up of a collection of diversified, modern organizations. Incessantly seeking excellence in products and services. Diversifying, but with focus. Each company with its strict business focus, expanding and accelerating its competitiveness through the intermediary of the best partners in a particular field in order to never lose the focus on its own business.

Itaú

Itaú

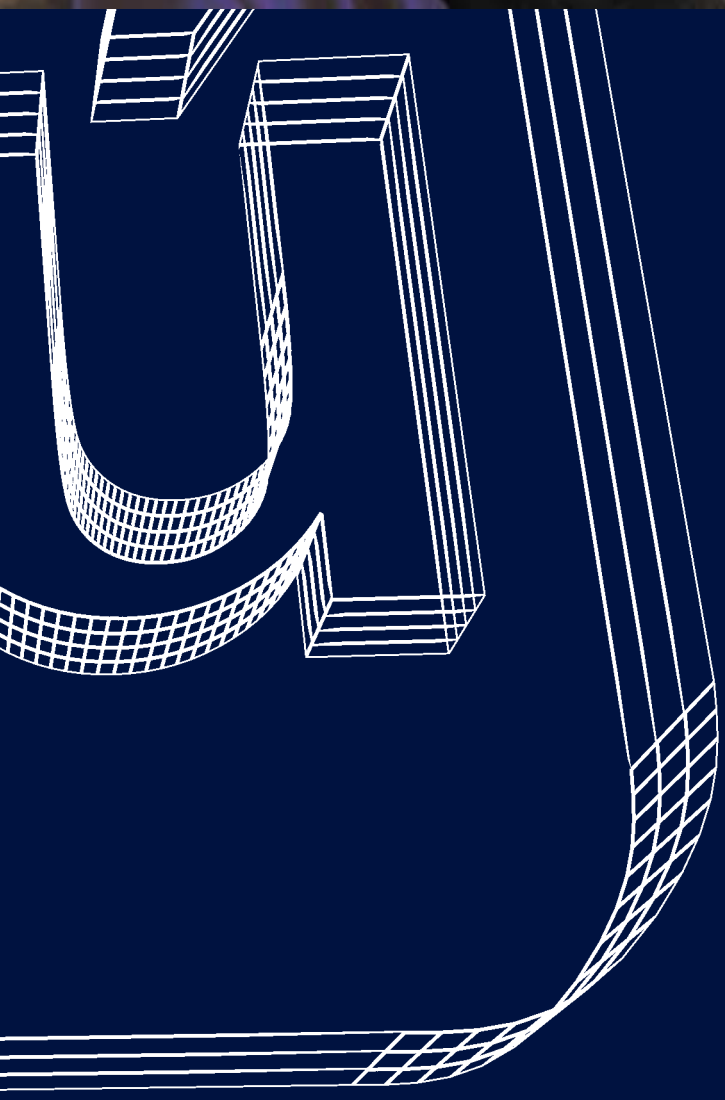

BANCO ITAÚ
THE MANAGEMENT'S REPORT

Financial Area and Insurance
Banco Itaú

Banco Itaú reported excellent results in fiscal year 2000 maintaining its profitability (ROE) at high levels and in line with the average return of 27% recorded over the past three years. Itaú's market capitalization remained the highest among all Latin American banks, posting a value of R$ 21,297 million (US$ 10,891 million).

BANCO ITAÚ
THE MANAGEMENT'S REPORT

R$ million

Principal performance indicators - Banco Itaú Consolidated figures	2000	1999	Change (%)
Net Income	**1,841**	**1,869**	**(1.5)**
Stockholders' Equity	**6,642**	**5,907**	**12.5**
ROE (%)	**27.71**	**31.65**	
Total Funds	**98,903**	**74,882**	**32.1**
Funding from Third Parties	52,887	39,517	**33.8**
Funds under Management	42,025	31,994	31.4
Working Capital	3,991	3,371	18.4
Total Assets	**69,555**	**51,911**	**34.0**
Loan Operations, Leasing, Other Credits, Advances and Guarantees	**27,253**	**20,005**	**36.2**
Provision for Loan Losses Complementary to Minimum Required	**603**	**686***	**(12.1)**
Risk-based Capital Ratio (Basle Index) (%)	**14.4**	**21.0**	

(*) Already taking into account the criteria of Resolution 2682/99.

The consolidated portfolio of loans, leasing, advances, guarantees and operations with the characteristics of credit operations totaled R$ 27,253 million, a growth of 36.2% compared to December 1999. Itaú's outstanding free loan portfolio, excluding compulsory items, totaled R$ 10,079 million, posting an expansion of 38.0% for the year. The non-compulsory loan portfolios for private and corporate clients rose by 65.9% and 23.0%, respectively. Onlending operations, which typically finance fixed investments, grew 72.6%, to reach R$ 3,220 million.

At the end of the year, Itaú showed a total of R$ 98,903 million in consolidated own free funds plus third-party and managed funds, a value 32.1% over that for December 1999. Of this total, R$ 42,025 million corresponded to investment funds and other administered resources, an increase of 31.4%. Deposits (demand, savings and term) rose by 20.5%, to reach a total of R$ 27,645 million.

Itaú, together with its subsidiary banks in Brazil, administers 10.8 million current accounts, 8.6 million savings accounts and 3.3 million credit cards. Banking service facilities are provided by 2,029 full branches, 851 banking service points and 11,375 ATMs

Acquisition of Banco do Estado do Paraná - Banestado

On October 17, 2000, Banco Itaú acquired by privatization auction, 88.04% of the shares in the total capital of Banco do Estado do Paraná S.A. - Banestado, for a total of R$ 1,625 million. The acquisition also included companies in the insurance, asset management, credit cards and capitalization areas, either directly or indirectly controlled by Banestado.

Banestado has 346 branches in the State of Paraná, 171 banking service points, 668,000 current accounts and 1,230,000 savings accounts. With this acquisition, the Itaú Group takes the leading market share in Paraná, thus consolidating its lead position in three of the five largest states in Brazil.

Banestado will only begin to make a positive contribution to Itaú's earnings from 2002, following the necessary investments to restructure the Bank. Itaú plans to invest R$ 70 million up to December 2001 in the modernization of branches and in the operating infrastructure.

Strategic alliance with America Online Latin America (AOLA)

On June 12, 2000, Banco Itaú concluded a strategic alliance with America Online Latin

America, Inc. (AOLA) and its subsidiary América Online Brasil Ltda. (AOL Brasil), whereby it took a 12% stake in AOLA's capital stock. Itaú obtained this stake without making any cash disbursement, since it simultaneously committed itself to offering the AOL Internet service to its clients. This includes access to on-line banking services, an exclusive customized financial channel and a complete package of AOL Brasil's exclusive services, as well as free subscriber access to the exclusive consumer service center.

By entrusting AOL with the function of providing the best access technology and content to its clients, Itaú will continue to specialize in the supply of financial services. At the same time, the Bank increases its competitiveness by benefiting from the best available partnerships in the market, thus contributing to the success of its policy of creating shareholder value.

Partnership with "la Caixa"

Itaú and "la Caixa" – Caja de Ahorros y Pensiones of Barcelona have established a partnership, which had its origins when both acquired equal stakes of 15% in BPI – Banco Português de Investimentos, SGPS, S.A.

This partnership has now been expanded through the acquisition of a 3% stake by "la Caixa" in the capital of Banco Itaú. "La Caixa" now has the right to indicate a member to Banco Itaú's Administrative Council and the International Consultative Committee, together with a Managing Director to the Board of the Bank.

"La Caixa" is an institution founded more than 150 years ago. It currently ranks in first place among the European savings banks on the basis of net income. It is Spain's third largest financial conglomerate with assets of US$ 80.3 billion, and stockholders' equity of US$ 5.6 billion and employs 21,976 people. It holds a 10% share of the Spanish market and 36% in the Catalan Region, its home market. Besides holding a stake in BPI, "la Caixa" has significant participations of 4% in Deutsche Bank, 3.8% in Telefonica, 9.9% in Repsol-YPF, 26.4% in Gas Natural, 5% in Endesa and 15% in Banco Sabadell.

This partnership is now expected to grow through mutual cooperation in areas of the investment bank, particularly those involving capital flows between Brazil and the Iberian Peninsula.

Launching of Itau's Code of Ethics

In launching its pioneering Code of Ethics, Itaú reaffirms to its clients, stockholders and employees its commitment to the practice of the best business ethics. The Code of Ethics, which is being widely promoted to both the Bank's internal and external publics, reinforces one of the pillars of Itaú's corporate culture by establishing guidelines for professional and personal conduct to be followed by all employees.

Recognition

During 2000, Itaú continued to receive several manifestations of public recognition. Itaú was ranked the Best Domestic Bank in Latin America by Euromoney and the Best Brazilian Bank by The Banker. Itaú was also the first Brazilian company to receive Moody's "Aaa.br" classification, the highest on its domestic rating scale.

Insurance, Private Pension Plans and Capitalization

Itaú Seguros (Itauseg) and its subsidiaries posted a net income of R$ 157 million in the fiscal year, a growth of 6.0% compared to 1999 and a return of 23.7% on equity. Premium income registered a total of R$ 1,307 million and technical reserves were R$ 838 million. Several refinements in the acceptance of risk and the settlement of vehicle insurance claims contributed to an improvement in the claims ratio from 64.7% in 1999 to 61.1% in 2000. As a result, the combined ratio fell to 98.7% against 103.1% in 1999. Itauseg is well placed to expand its insurance operations thanks to favorable earnings and the close monitoring of risks.

The area of private pensions was notable for the growth in the Itaú Previdência e Seguros (Itauprev) plans for the personal segment, principally the PGBL (*Plano Gerador de Benefício Livre)* plans. During 2000, Previdência's income grew 47.2%, representing revenues totaling R$ 433 million. Itauprev has accumulated technical reserves and funds in PGBL plans of R$ 896 million, 57.3% higher than 1999, a value which ranked the company in fourth position in the market.

Itaú Capitalização (Itaucap) ended the fiscal year operating 19 active capitalization plans with accumulated technical reserves of R$ 865 million.

ITAÚSA PORTUGAL

Itaúsa Portugal, SGPS, S.A., the holding company for the group's activities in the European Union, reported consolidated assets at the end of 2000 of EUR 1.7 billion (US$ 1.6 billion), a growth of 29.3% over the year. Recurring net income

posted EUR 27.9 million (US$ 26 million), 25% higher than 1999, corresponding to an average 11.8% return on consolidated equity of EUR 252.8 million (US$ 235.2 million).

The subsidiary company Banco Itaú Europa (BIE), a bank incorporated according to Portuguese legislation and regulated by the Central Bank of Portugal, maintained its investment grade classification and ended the fiscal year with total assets of EUR 1,527 million (US$ 1,420.9 million), 26.8% higher than 1999. Net income was EUR 15 million (US$ 14 million), or 47.8% more than a year earlier. With stockholders' equity of EUR 195 million (US$ 181.5 million), the Bank posted a capital ratio of 27%.

Banco Itaú Europa Luxembourg (BIEL), regulated by the Central Bank of Luxembourg, operates exclusively in the sphere of private banking. At the end of the fiscal year, BIEL managed assets, which exceeded US$ 800 million, registering a net income of EUR 4 million (US$ 3.7 million) and a return of 13.7% on stockholders' equity.

The Itaú Group increased its stake in its associated company BPI, SGPS, S.A., from 12.5% to 15%. BPI, SGPS, S.A. is the holding company of one of the most important Portuguese banking groups and reported end of year figures of EUR 21.9 billion (US$ 20.4 billion) in assets and net income of EUR 152.4 million (US$ 141.8 million), a growth of 32.4% and 22%, respectively. Itaú Group's participation in BPI, SGPS is focused on IPI – Itaúsa Portugal Investimentos, Lda., in which Itaúsa Portugal holds 51% of the quotas in the capital stock and Banco Itaú the remaining 49%.

BANCO ITAÚ
TECHNOLOGICAL DEVELOPMENT

Itaú has reached its current position because it has made good use of advanced technology in its operational and management processes and because it has the trained teams committed to total quality and the satisfaction of its customers. As necessity is the mother of invention, it was necessity that transferred bank processing to the cashier's desk in order to avoid duplicated effort and necessity that provided the incentive for the Bank to develop its own cash terminals when imports of equipment were prohibited. A task, which was taken to heart by the internal organs of the bank, which were the seeds of the Itautec Division. The quest for independence became Itaú's trademark. Last year alone, more than 3 million hours of work were dedicated to the development and upgrading of existing proprietary systems and principally in the creation of new services and products. And when the technological resources are already available in the market, the Bank has as one of its golden rules the preservation of its independence by using at least two suppliers for each type of technology.

The fact that the branches are directly linked to the processing, systems and technology area (about 20,000 employees involved in operations and a further 3,000 highly trained in information technology) means that the area itself is the user of the principal bank systems. For this reason, the degree of equipment utilization at Itaú is above the market average, as measured by data-processing capacity. Among the principal indicators of this capacity is the infrastructure supporting the two large DPCs: 21 CPUs, which are able to process 17.1 billion instructions per second; storage capacity of 48 terabytes, besides more than three dozen robotic operated computer tape libraries.

Over the last seven years ending 2000, Banco Itaú spent R$ 5.4 billion (in values as at December 31, 2000) on information technology. Of this total, R$ 1.8 billion (34%) was allocated to the acquisition of new technology (hardware and software) and a further R$ 3.6 billion (66%) was used to cover operating/maintenance costs and development of the existing infrastructure. Capital expenditure of R$ 1 billion is planned for 2001.

Technology is certainly one of Itaú's biggest competitive advantages. Thus it is natural that the Bank should increase its capabilities in the Internet and increasingly use this modern channel of doing business.

The intensive use of the Internet demands an appropriate IT infrastructure – an aspect which the Bank certainly does not lack, having just concluded the first stage of the implementation of its *ATM backbone Frame Relay*. With this, operations can be performed at speeds of up to 155 Mbps between the organization's main offices. The new infrastructure also provides efficient backup in cases of disaster recovery and the dissemination of uses based on Web technology. In the first half of 2001, the entire Itaú branch network will be operating at high speeds (64 to 128 kbps), via IP protocol.

Furthermore, the Itaú telecommunications network has 12 high-velocity satellite circuits, 36 radio links, 143 domestic optic fiber circuits, six international circuits (four of which are optic), a VSAT network with 2 master stations and a further 600 on a remote controlled basis.

One more significant measure of the Bank's degree of automation is its computer hardware: 76,400 microcomputers/terminals – 11,700 ATMs, 17,800 cash terminals, 16,700 administrative workstations, 30,200 microcomputers and other terminals in branches and the corporate network.

A modern IT infrastructure would be of little use without trained people to optimize its use. In 2000, the Bank invested R$ 33 million in training and development, with special emphasis placed on the use of the Internet. It also granted more than 2,000 scholarships for undergraduate and post-graduate courses, as well as university extension courses.

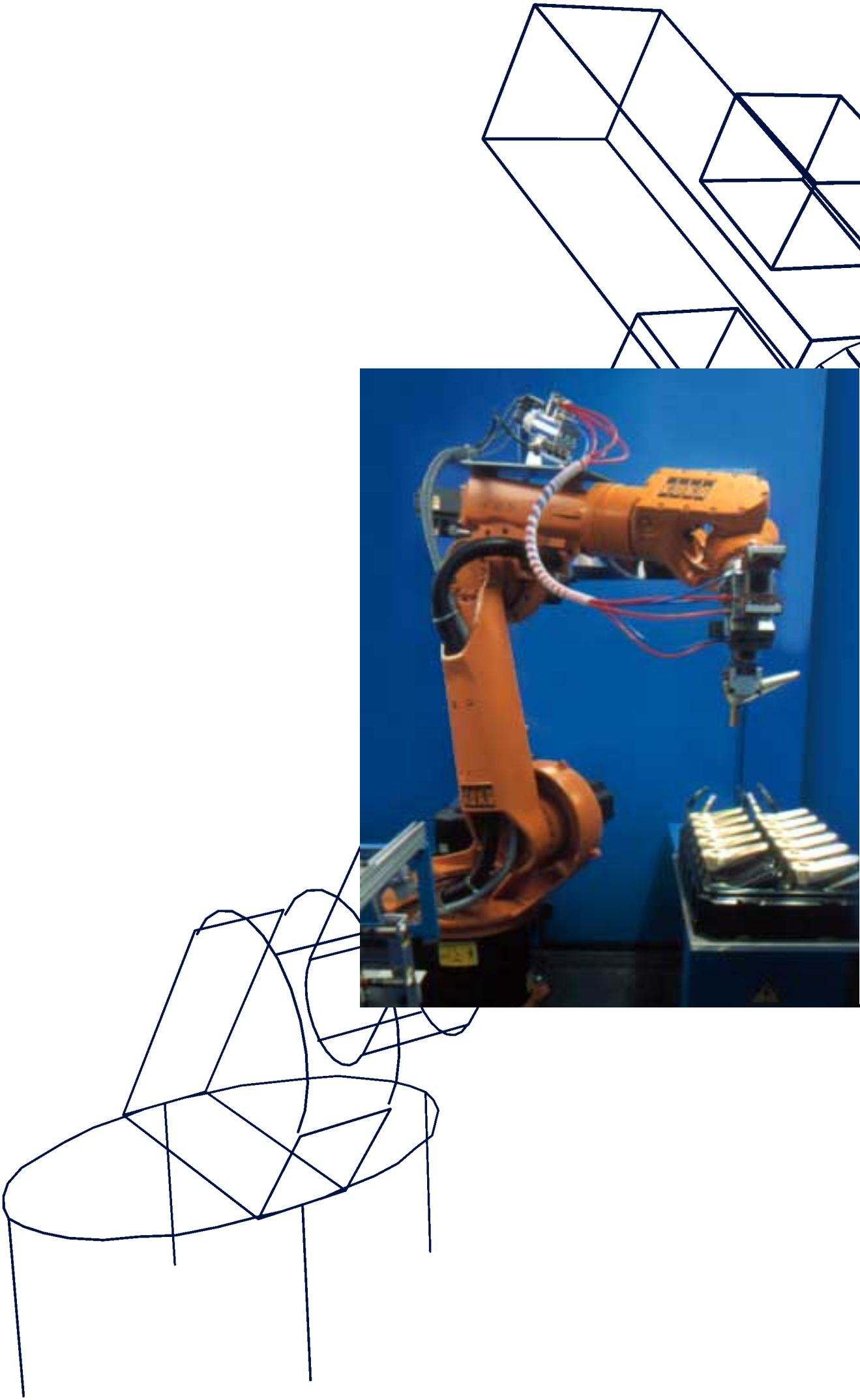

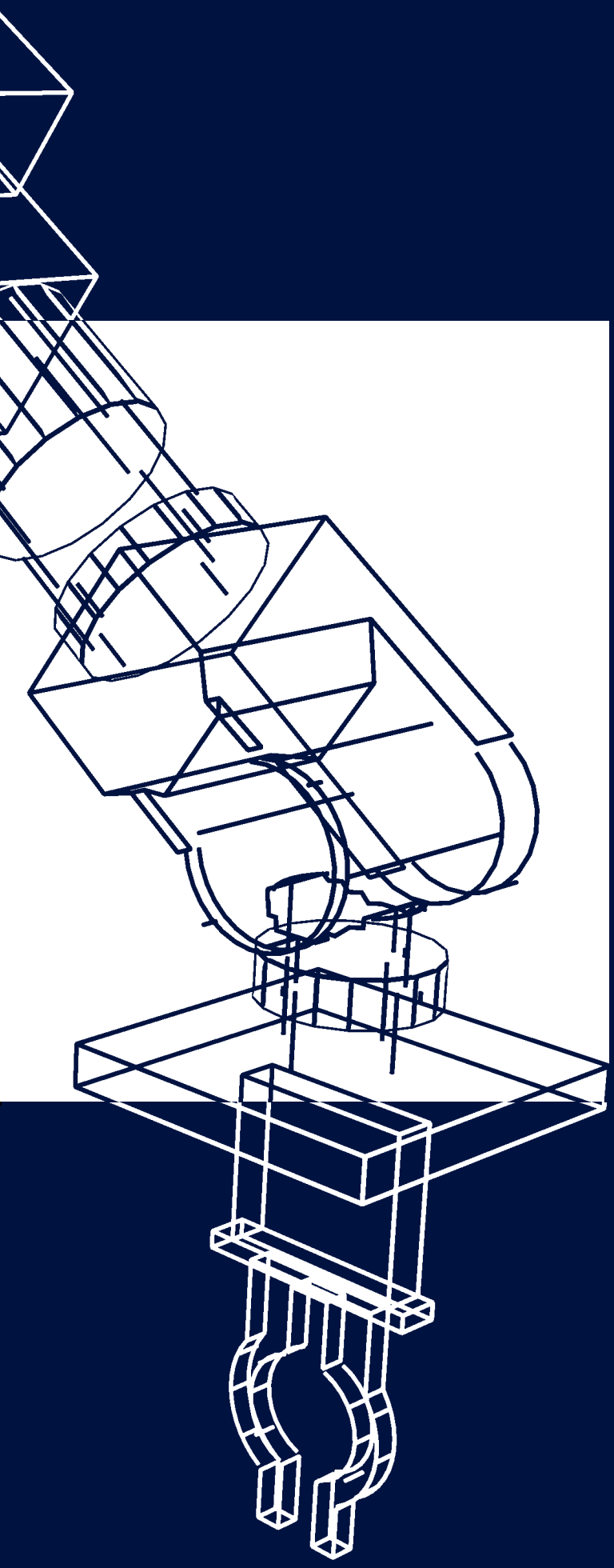

DURATEX
THE MANAGEMENT'S REPORT

Duratex reported revenues of R$ 944.7 million in the fiscal year, exceeding the 1999 result by 15.7%. Operating income before the financial result was R$ 142,0 million, equivalent to earnings before interest, tax, depreciation and amortization (EBITDA) of R$ 199.4 million. Net income was R$ 66.7 million, a significant rise of 560.4% over the R$ 10.1 million posted the previous year.

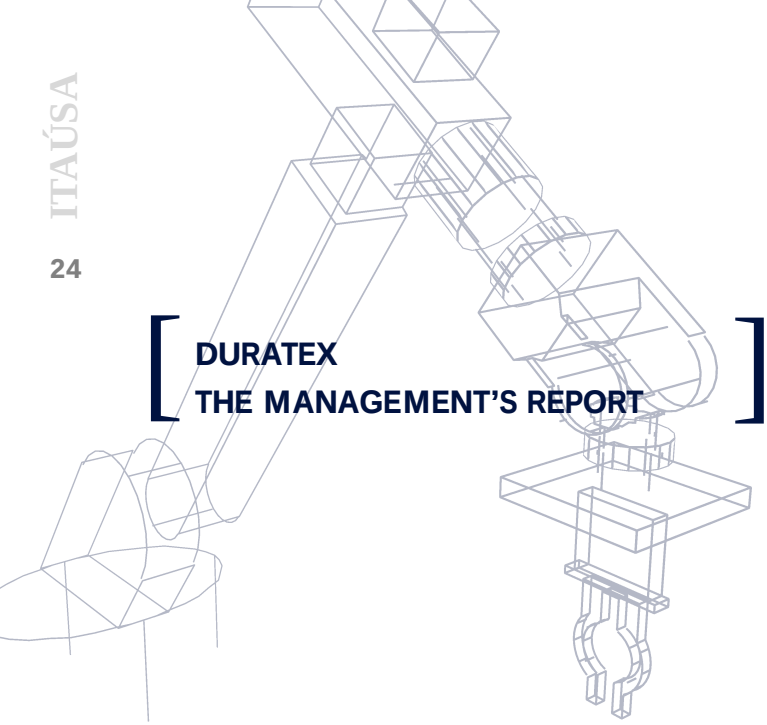

DURATEX
THE MANAGEMENT'S REPORT

Capital expenditure during the year was R$ 138.9 million, of which the most important items were:

• The Wood Division: R$ 68.5 million was invested in a new wood conglomerate production line in Itapetininga-State of São Paulo; R$ 12.4 million in forestry activities, including the purchase of equipment for mechanization of timber extraction, acquisition of farms and reforestation and forestry maintenance; and R$ 9.7 million in the implementation of a new impregnator for finishing papers at the Agudos plant in the State of São Paulo.

• The Deca Division: R$ 20.0 million for expanding the installed capacity of metal sanitary-ware output and for the acquisition of foundry equipment and automation via robotization; R$ 7.7 million in new products and processes and R$ 2.3 million for increasing the production capacity of vitreous china products through the installation of one more furnace.

In the specific area of development and technology, Duratex invested R$ 13.7 million, of which R$ 9.0 million went to the Deca Division and R$ 4.6 million to the Wood Division.

Notable in the Deca Division was the investment of R$ 1.7 million in the development of the new HydraFlux flushing valve. This valve, which supplements the existing line of water-saving products, is the most efficient in the market, using only six liters of water. The product received the XXVI "The State Governor Prize – Brazilian Invention category" award.

As part of its strategy of technological integration into the new economy, Deca has established an Internet site (www.decanet.com.br) directed towards

business development and loyalty programs aimed at wholesale customers, the result being that there has been a significant reduction in costs for both company and customer. The site enables enrolled clients to buy products, consult invoices, trade notes, prices and delivery terms.

In September/October, Duratex increased its capital of R$ 190.8 million, through the issue of 3.6 billion in shares to supplement the funds necessary for the implementation of the Investment Plan. The issue was concluded successfully in November with a resulting improvement in the liquidity of the company's paper through the increase in the shareholding base and free float.

Duratex is taking the preparatory steps for a listing on the New York Stock Exchange via an ADR Level 2 program. The company believes that this will make its business activities more transparent as well as projecting a more significant presence in the capital markets.

Below are outlined the principal steps the company is taking in the development and technological upgrading of the company. Duratex has programmed investments of approximately US$ 8 million to be disbursed over the next two years:

• Conclusion of innovative technological development for the production of MDF and HDF panels with significant gains in productivity. The equipment for manufacturing these panels is being especially developed by the German company, Siempelkamp Gmbh & Co. Duratex will enjoy exclusive rights to the equipment over eight years. A contract covering the purchase of a production line using this technology has already been signed. The new line will have a capacity of up to 400,000 m^3/year – one of the largest production lines for paneling in the world and involving investments of US$ 70 million with start-up scheduled for the fourth quarter of 2002.

• New processes of surface finishing for the wood conglomerate production line at the Itapetininga plant and for the impregnation of coating papers at the Agudos unit.

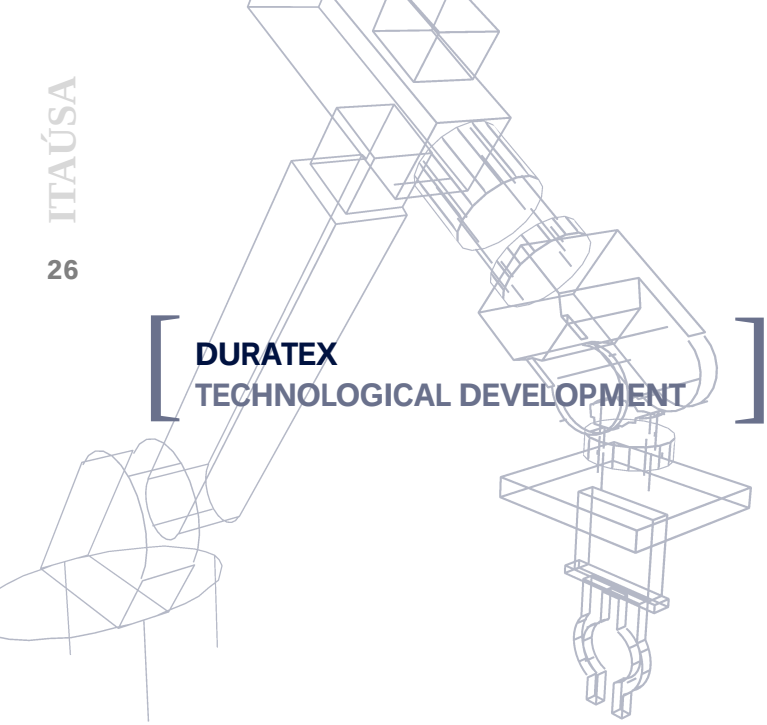

DURATEX
TECHNOLOGICAL DEVELOPMENT

The need to control the production factors was the driving force behind Duratex's current level of technology. In this segment of industry, technology, quality and productivity are fundamental in beating the competition and achieving the position of market leader, above all in the face of worldwide competition.

These three factors form the basis for the good performance registered by the company. The constant supply of new products and the permanent concern with providing consumer satisfaction are also key items in its success.
The company has been implementing a major program of innovations, modernization and automation with the objective of winning market share, rationalizing and increasing productivity and reducing costs.

Duratex achieved further success in developing its own technology in the face of the need to remain competitive. After four years of research and engineering of products and processes, the company has consolidated its innovative technology for the production of medium and high-density fiberboard, which will see a significant productivity gain.

Using its own know-how, Duratex has now established the manufacturing conditions and the characteristics of the material to be used in the fiberboard. The German company, Siempelkamp GmbH & Co will specifically design machinery for the purpose and Duratex will enjoy exclusive rights over the equipment for an eight-year period.
A contract has also been signed for the purchase of a production line using this technology with a maximum capacity of 400,000 m3/year – one of the largest lines for paneling in the world – with investments of US$ 70 million. Operations are expected to begin in the last quarter of 2002.

At the beginning of November, the first stage of the Itapetininga Wood Agglomerates Project – one of the largest investments of the company in the wood division – was concluded. The production line is based on the modern technology of continuous processing and automated pressing, which will result in greater installed capacity and a leap forward in terms of the quality of wood agglomerates as well as savings of 12% in direct production costs. The company gave 17,000 man-hours of training in order to develop the skills of the employees involved in operating the new plant.

The forestry area follows the same line of development. The company uses modern technology from the initial selection of seedlings for planting, through the growing of cloned forests to the final process involving improvements in cutting techniques. The cloning process – the production of genetically identical species – follows on from the selection stage of tree species – which includes resistance tests to various types of disease – such as plant rust – and climatic conditions as for example frost. The selection of species guarantees the production of high-quality, low-cost wood while the standardization of these species ensures that the cutting process can be optimized, a function which is now completely mechanized. By the middle of November 2001, Duratex was able to produce clones in sufficient quantity to begin large-scale commercial plantations. While Duratex's current forestation projects are based 100% on the use of seeds, the target is for the ratio to be 1/3 cloning and 2/3 seed-based within a time frame of three to five years.

Tractors have now substituted chain saws. Result: besides a reduction in accident risks, the activity now operates on an uninterrupted basis with an efficiency gain of 30% in 2000.

The driving force of Deca's metal and ceramic sanitary ware division is the unification of

technological innovation, quality and avant-garde design in the development of world-class products. The Deca division is a market leader in its line of business with well-known brand names, while one of the measures of its permanent innovative capacity is the volume of new product launches: about three hundred new products since 1997.

The results achieved during the fiscal year are once again clear evidence of Deca's pioneering spirit: the launching of the new Hydra Flux flushing valve, the most economical of its type in the market limiting water volumes to a maximum of six to nine liters, depending on the size of the lavatory bowl. This innovation, which has already been patented, supplements the division's existing line of water-saving products and received one of the awards in the XXVI "State Governor's Prize – Brazilian Invention" – the first time that Deca had taken part in the competition. The development of a valve with the characteristics of Hydra Flux was born out of the need to attend the requirements of the Brazilian Program of Quality and Productivity in the Home, which aims to reduce the water consumption required for flushing.

However, in spite of the new product, Duratex could not ignore the enormous number of standard Hydra valves already installed in the market.
A major effort was made to adapt the Hydra Flux technology to the HydraMax product as a sign of Duratex's respect for the consumer and as part of its philosophy of conservation of the environment. The solution: a cartridge, which could be inserted in the old valve without the need for drilling through walls and bathroom tiles. Another important characteristic of the Hydra Flux valve is the company's concern in offering a longer useful life to the product (after all, the Deca guarantee is for ten years). While The Brazilian Association of Technical Standards (ABNT) establishes minimum product testing of 30,000 cycles, Deca seeks to provide greater quality control by establishing 500,000 cycles as its minimum tolerance limit. In 2001, Deca will be launching the electronic version of Hydra Flux, to be known as the Hydra Lux valve.

The company makes its innovative products based on highly automated plants organized in work cells. Deca's constant modernization of equipment and productive systems is one of the pillars sustaining market leadership in its field. Modernization, which is reflected in the continual incorporation of state of the art technology and constant upgrading of product quality and in the manufacturing process.
The efficiency of the plants producing the metal sanitary ware has grown significantly in the last few years, not only by the use of the latest in equipment but also by the adoption of new management systems as, for example, in the operation of mini-factories and work cells.

The adoption of modern methods of management and the implementation of new technology is not achieved without a trained and motivated workforce. For this reason, in addition to technical training in new processes and technology, as well as visits to domestic and overseas trade fairs and suppliers, the company holds supplementary courses for upgrading the educational levels of the teams. In 2000, Deca's 1,600 employees took part in 53,909 hours of training, that is 28.4 man-hours for each employee.

On the customer relations' front, Deca inaugurated its decanet.com.br site for B2B operations. Duly enrolled customers can use the site for purchases and for checking invoices, trade bills and delivery times. The system began with 35 names and, during the course of 2001, is expected to include Deca's 500 largest customers.

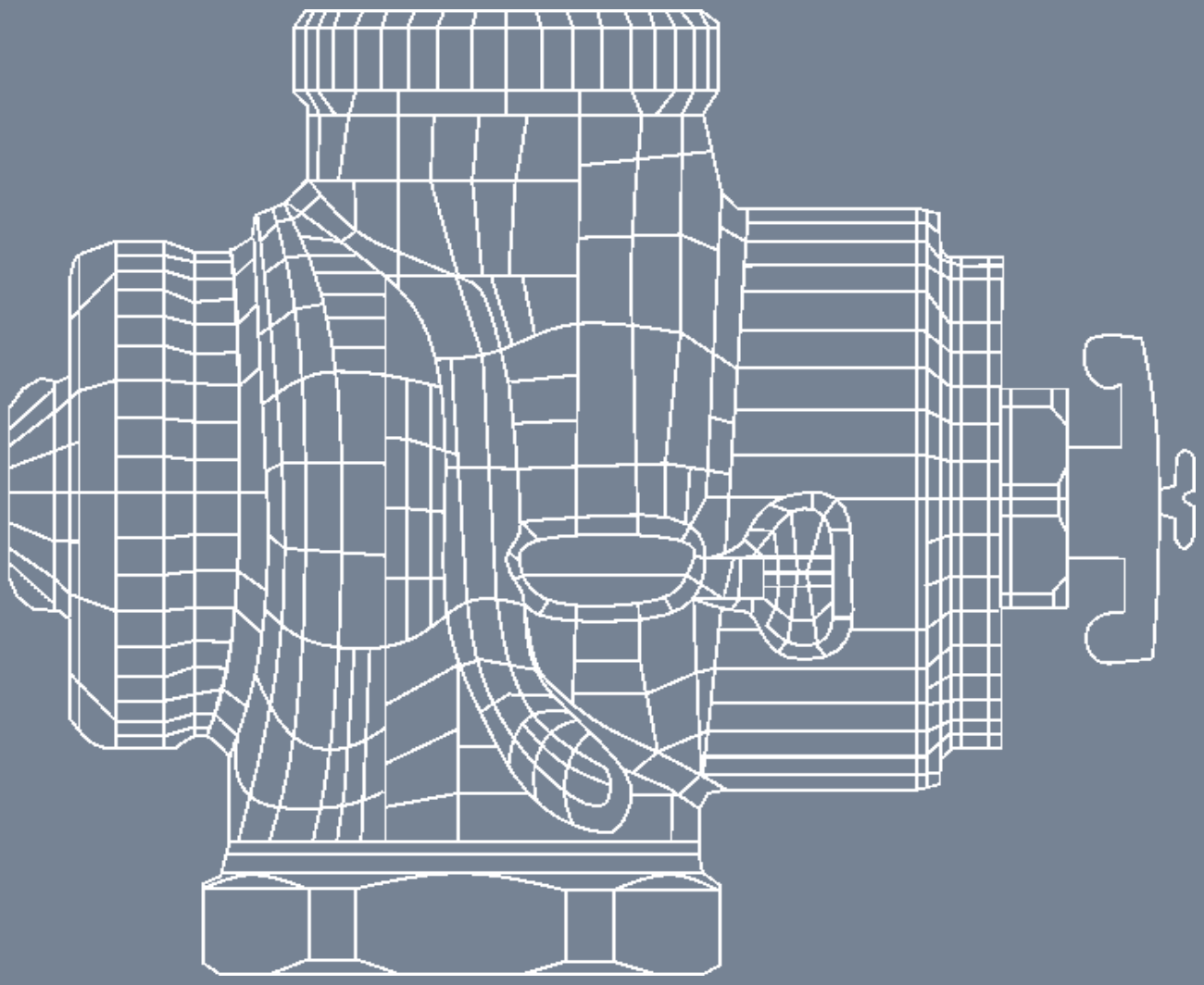

HYDRA FLUX VALVE

The Hydra Flux valve offers a discharge system with volume control of six to nine liters of water, depending on the sanitary basin used. This is possible tanks to an internal mechanism, which limits the maximum flow of discharge regardless of the time of turning on. This invention was one of the winners of the XXVI “State Governor Prize – Brazilian Invention Category” award.

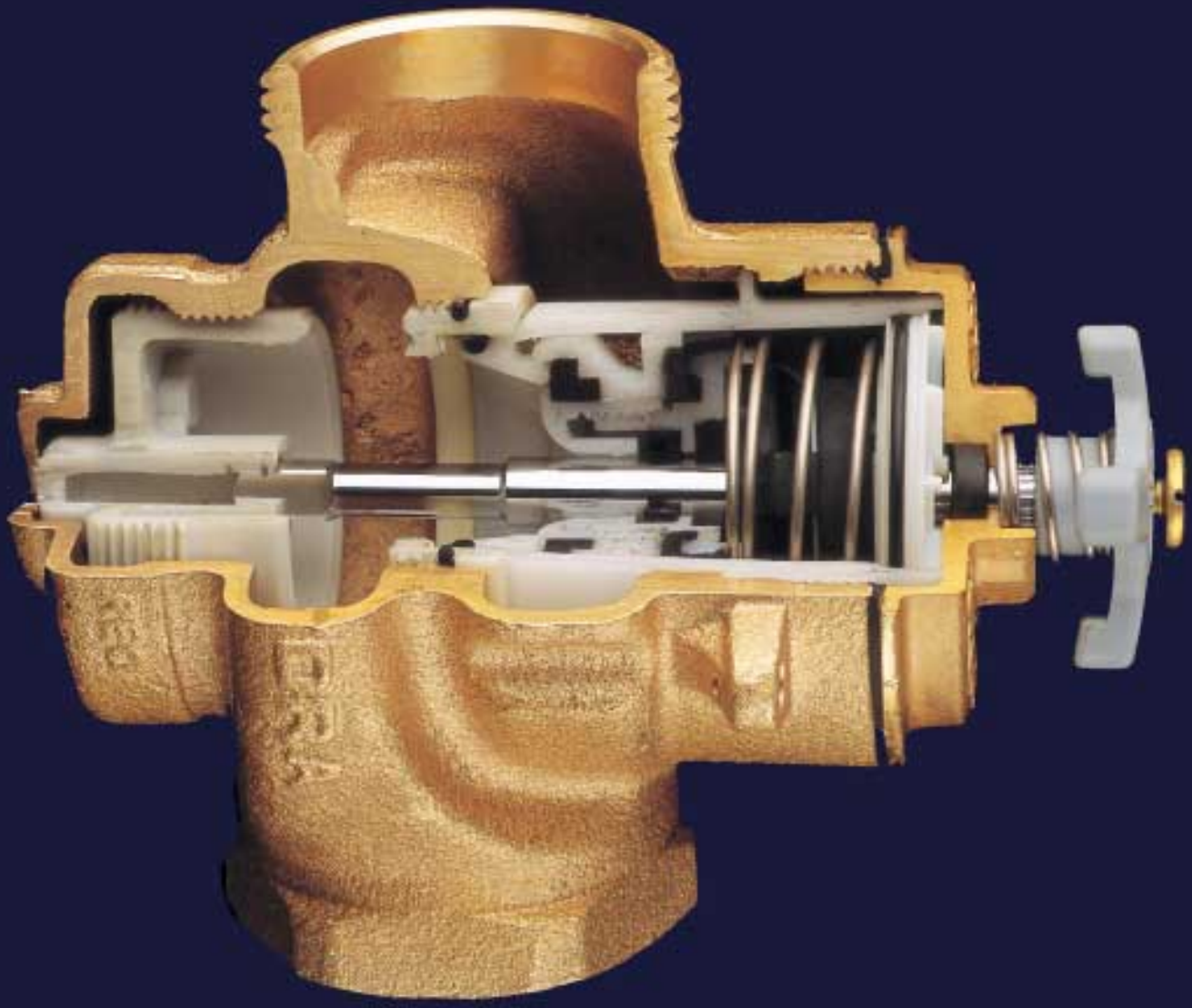

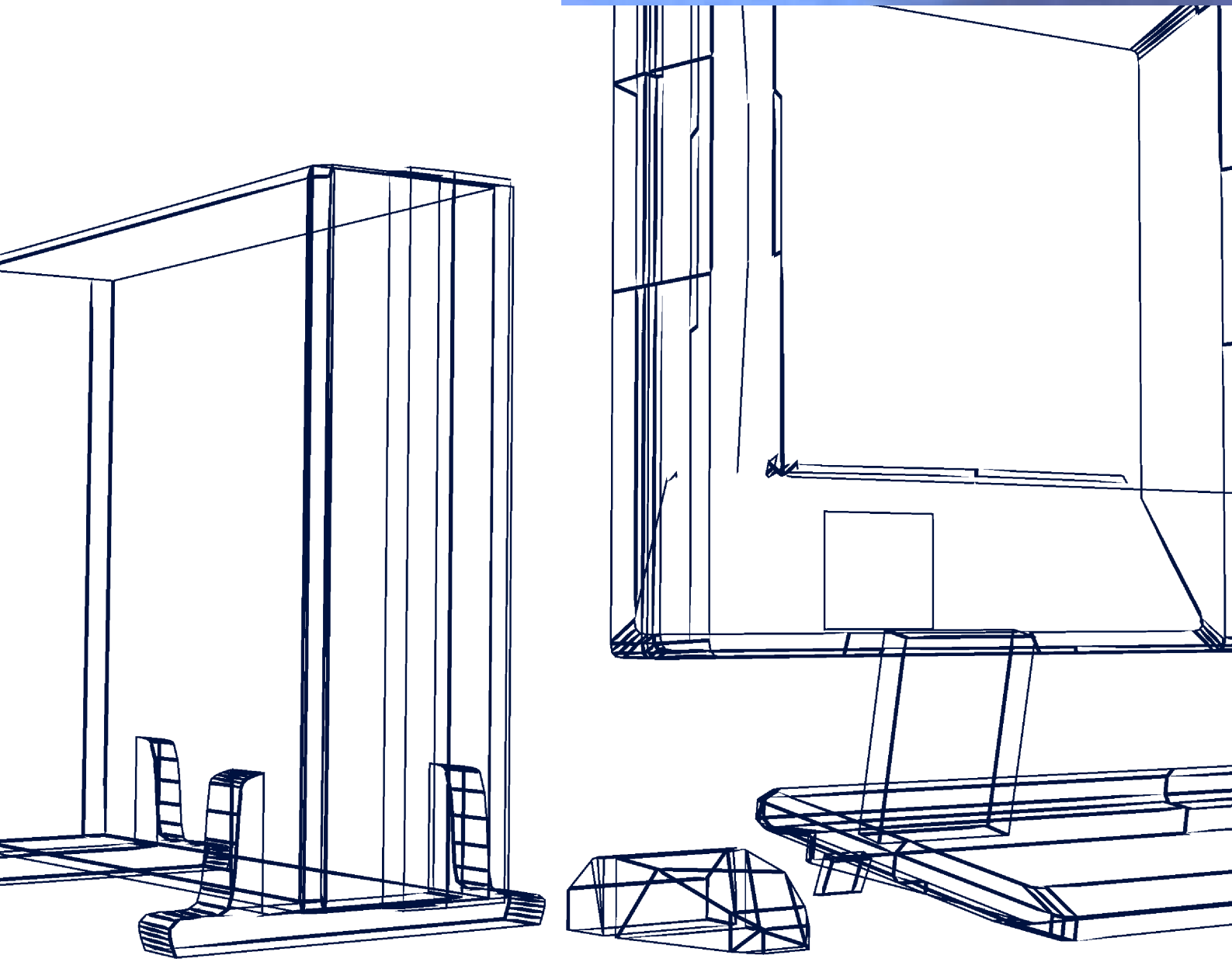

ITAUTEC PHILCO
THE MANAGEMENT'S REPORT

Itautec Philco

Itautec Philco reported billings of R$ 1,327.8 million, 31.8% higher than 1999. Net income was R$ 60.1 million, nearly three times the earnings posted in 1999 and representing a 21.6% return on equity of the controlling company. Earnings before interest, taxes, depreciation and amortization (EBITDA) were R$ 129.7 million, or a growth of 48.4% in the fiscal year.

ITAUTEC PHILCO
THE MANAGEMENT'S REPORT

Net income, including provisions and depreciation appropriated in the period, produced a cash flow of R$ 134.4 million. Investments in working capital were R$ 121.7 million, the lion's share for building up inventory to meet increased demand during the period.

Itautec Philco called an Extraordinary General Meeting on December 28, 2000, to establish the rules of corporate governance and to make the necessary adjustments to conform with the requirements of the New Market, also launched with by the São Paulo Stock Exchange - Bovespa in December. The EGM approved the conversion of all A and B class preferred shares into common shares.

The Plan for Use of Funds (*Plano de Aplicação de Recursos* - PAR) posted an accumulated total of R$ 122.3 million, distributed as follows: (1) R$ 41.8 million in technological development; (2) R$ 44.8 million in plant for automation and modernization of industrial plant and in office installations. Included in this figure, worthy of note was R$ 22.2 million spent on the installation of a factory for the manufacture of Multilayer printed circuit boards; (3) R$ 12.2 million in equipment for rental; and (4) R$ 23.5 million for revamping points of sale as well as promotional events and propaganda for strengthening the Itautec and Philco brand names.

Itautec

The Itautec area is known as the pioneer in the production of high performance PCs with the launches of innovative products, such as the *Transglobe Slim* (equipment with a compact design) and a new line in notebooks. As a result, sales of PCs reported a year-on-year growth of 88% compared to 1999, to reach monthly output levels of 20,000 per month in the last quarter of 2000.

In the segment of banking and business automation, Itautec consolidated its position with the expansion in the supply of products and also infrastructural items both in Brazil and overseas. The company now has equipment installed in the USA, Argentina, Uruguay, Portugal, Mozambique and Angola. In Portugal, the company installed its largest web interface support project using the IHC (Internet Host Connector).

The company's leading product in the segment of self-service banking was the *WebWay Slim* kiosk with avant garde design, which permits multi-purpose uses, such as terminals for Internet access, line organization system, billing payments or general information purposes.

More than 130 client projects were included under the Itautec.com Serviços umbrella, including development of sites and *business-to-consumer* (B2C) and *business-to-business* (B2B) applications. In the area of implementation and technical assistance, the focus was on connection services for the installation of the Internet broadband system with more than 15,000 units being activated over a four-month period. The company also has an important market presence in the maintenance of VSat communication equipment for heavy-duty users. In addition, over a two-month period and using NT servers, the company installed the entire local network and communications architecture for approximately 650 branches of a new client with major penetration in the banking segment.

Itautec displayed its products and services using the WebWay architecture at two major events, both of which were highly successful. Keen interest was shown by the market, particularly in relation to the WebWay Shop (virtual shopping system), JetShop (store rental service for small and medium-size businessmen) and WebWay Trade (a B2B and B2C site).

Philco

Philco successfully met growth forecasts for the electrical and electronic equipment market, especially in the sound and vision segment. The company reported a year-on-year increase in gross revenues of 53.8%, with a strong contribution coming from higher volumes in the TV "Platinum" line, especially the wide screen version.

In July, Philco launched its new generation DVDs, the DV-P2000, which among other characteristics combines the qualities of a high-resolution digital picture, Dolby Digital audio system with built in decodifier and capacity to reproduce not only DVDs but also CDs, CDRs, CDRWs and MP3 archive discs. In June, the company also launched an new line of 14" and 20" *Duetto* models, (combined TV-VCR), which were very well received by the market in view of their ultra modern design. Finally, in October, Philco began marketing a new line of *Mini-system*s with 3 CDs, in two versions of 40 and 100W RMS.

In the TV segment, of particular note was the development of the 29" and 32" wide-screen models employing the 100% flat screen **(***RealFlat***)** technology. These models provide the consumer with a brighter picture, wider vision and dynamic focus among other characteristics.

This product was such a success that one month's sales were equivalent to what had been forecast for the whole of the final quarter. The company also launched another important new product – the *Infoway TV* line, the first TV to be sold to the domestic market with fully digitalized sound and vision characteristics.

Itaucom

The Itaucom area registered a year-on-year revenue growth of 15%, in the semiconductor segment. This performance reflected the increased production of the leading computer manufacturers and the consolidation of motherboard sales to the distribution market.

In 2000, sales of memory module components were 11% higher than in 1999, with an accompanying improvement in the value added mix, thanks to the use of larger capacity modules. In 2000, the company began the manufacture of other types of modules for notebooks, printers, servers and expanded video memory.

The company posted an increase in overall revenues of 16% in its printed circuit business, an expansion in volume of 35% over 1999. The family of simple face products registered a particularly important growth of 65% in revenues, thanks largely to greater demand from the telecommunications market.

In the area of new products, Itaucom built a new plant for the production of Multilayer circuit boards using the fine track technology. These products are currently awaiting approval by the clients.

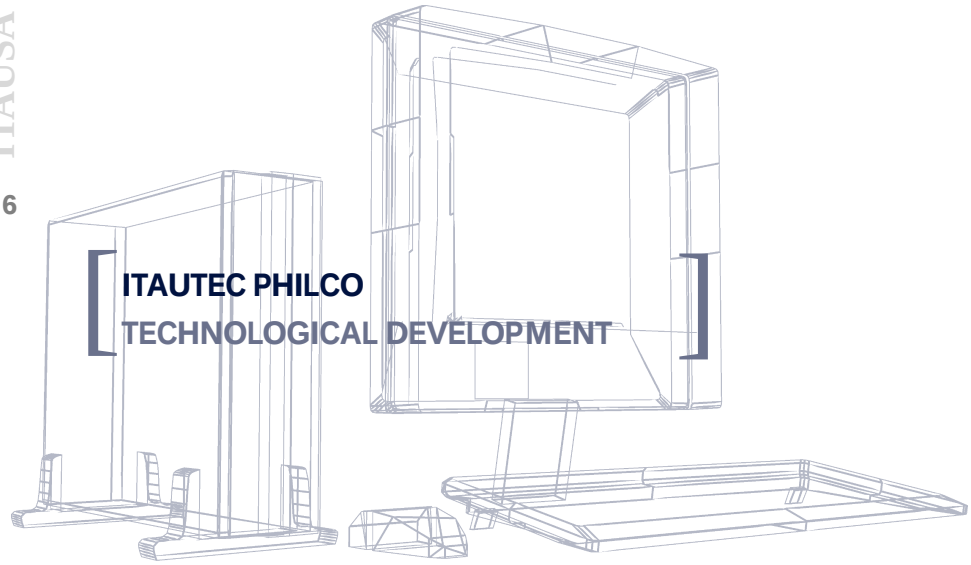

ITAUTEC PHILCO
TECHNOLOGICAL DEVELOPMENT

The story of Itautec Philco is one of acquiring know-how for the development of competitive state of the art technology. The company dominates technology in its new product development, thus allowing it to make converging products and services, bringing together the synergies from all the facets of its activity.

An excellent example is the project for the creation of the InfoWay, which has resulted in developments across several areas of the company. Thus the development of a line in Philco TVs with the most advanced characteristics arose out of the InfoWay project. This is also the case with Infomusic, which uses InfoWay techniques of reproduction, recording and storage of music to sell discs.

The banking automation system – Banctec – is one more successful example. At present, this set of software systems has the capacity to automate any of the distribution channels of a bank: branches, self-service networks or electronic channels (Internet, electronic commerce, etc.). The quality of the Itautec self-service machines is recognized in both the domestic and the overseas market.

In 2000, one of the Itautec's outstanding achievements was the turning out of products arising from joint know-how in computers, automated banking and the commercial area: Infomusic, a system for CD digitalization in the MP3 format, the design of which received an award from the Museu da Casa Brasileira. A similar product, the Infomovie, is used in DVD digitalization.

Itautec's standard of quality has been recognized by EAN Brazil (the Brazilian section of the independent international entity responsible for bar coding standards), which awarded the company the prizes for best software supplier for POSs, ETF terminals, multimedia terminals for consulting prices and commercial automation consultancy. Itautec also received the "Quality Total Brazil Prize" from the International Quality Service.

In the microcomputer segment, the company led the market with the production of PCs with high performance processing, besides the launching of computers with a compact design.

There was a challenge to meet in the area of consumer electronics: to create products, which would radically change Philco's image, accompany the rhythm of a market, where the velocity of innovation is similar to that of information technology and transform the potential for convergence between consumer goods and Itautec Philco's information technology into products. Drastic measures were needed to reach these objectives, such as the decision not to pay royalties more than was necessary and to cut the umbilical cord with technology suppliers. The moment to create proprietary products had arrived, and the focus was to be on TVs – the segment, where the company has the greatest capacity for development.

The choice was a happy one, as is witnessed by the frequent launching of top of the line Philco products with the company consistently in the vanguard of market innovations. And all based on local technology, including the Dolby Digital receiver, the first in Latin America to be approved by Dolby itself – not to mention the large screen TVs (29 and 33 inch) in substitution of previous models, the content of which had included even the TV cabinets themselves. In the TV segment, the

major launch in 2000 was the 29 and 33-inch wide screen models with 100% flat screen (*Realflat*) technology – the first equipment of its type in the Brazilian market.

The absorption of this technology leaves Philco in the comfortable position of not having to concern itself with Brazil's choice of digital TV technology. Whatever the decision, the format will be wide screen and, in any case, Itautec Philco has already developed prototypes using the different systems. It has also successfully taken part in transmission tests using the European system with digital products, which use entirely domestic technology.

Philco absorption of this technology has also enabled it to increase the value-added content of its products. The secret here is to dominate the development process: the circuit board project, purchase of the components, cabinet design, test equipment project and software development. This autonomy guarantees the rapid response time for reacting to change: for example, the company is free of the dependence on third parties should there be a need to modify a project or a component.

In the sphere of components and printed circuits, Itautec Philco is the principal domestic manufacturer of printed circuit boards, and memory modules. In the case of the former, Itaucom is in the happy position of being a one-stop-shopping source of printed circuit boards, thanks to the start-up of its *multilayer* plant and the change in the production process for manufacturing of double-faced boards. The company has the know-how to satisfy demand for special products in the circuit board area, where quality certification is required and, now the plant has ISO 9002 and QS 9000 certification, the latter being a specific requirement of world suppliers to the automobile industry.

Survival and business success in the semiconductor area is dependent on the permanent updating of technology. For this reason, besides manufacturing high-speed memory modules for desktop PCs, notebooks, servers and printers, Itaucom is also set up to produce DDR (*double data rate*) modules.

Among other developments, the company's technological know-how enables it to produce the specific software for the operation including test programs, quality systems and the absorption of the manufacturing formula for circuit board immersion.

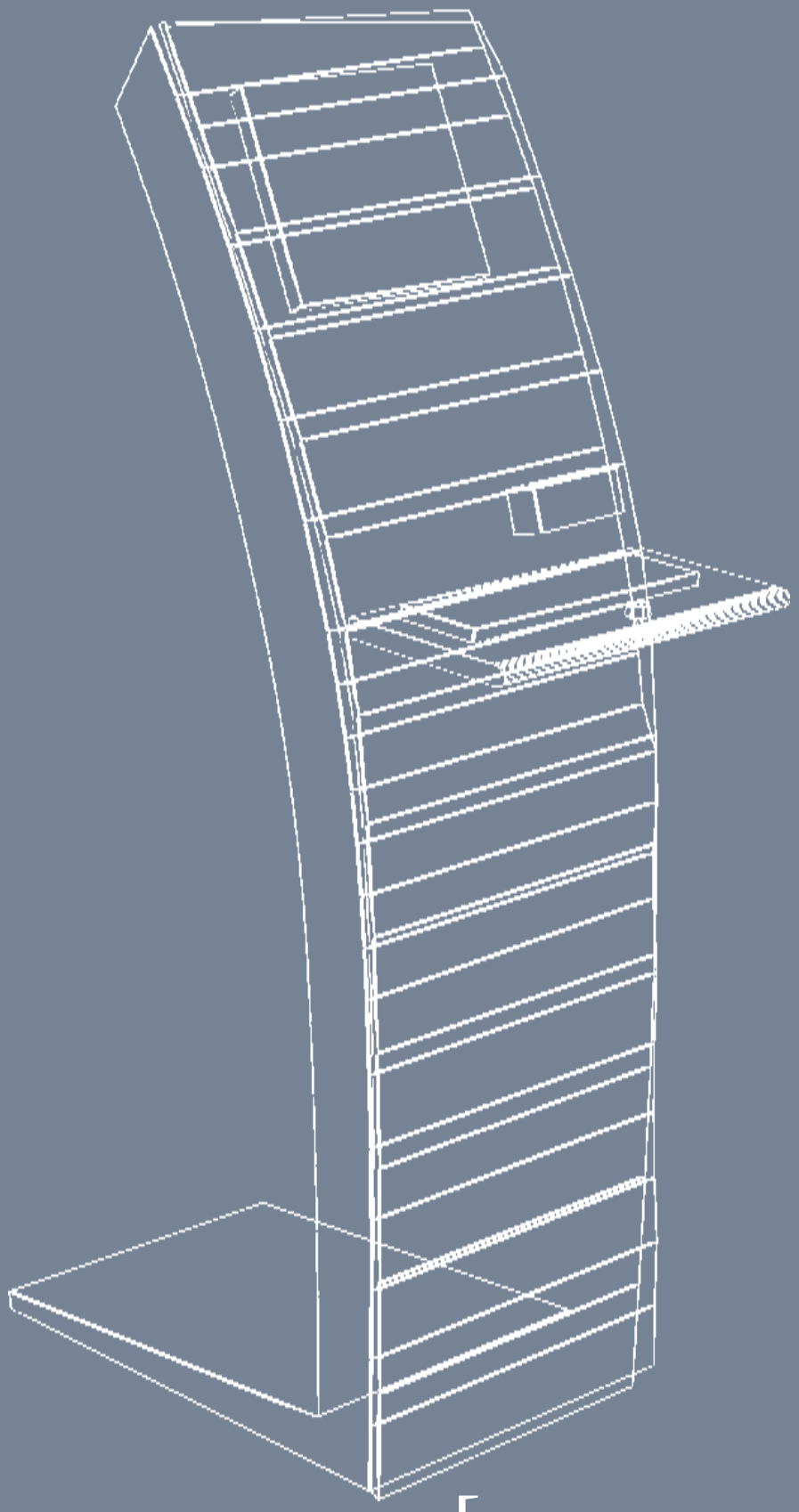

[ATM SLIM]

ATM Slim without cash dispenser for payment of accounts, demonstration of DVDs (similar to InfoMusic), Internet, self-service terminal and queue control. Itautec's own technology for ATMs.

Itautec

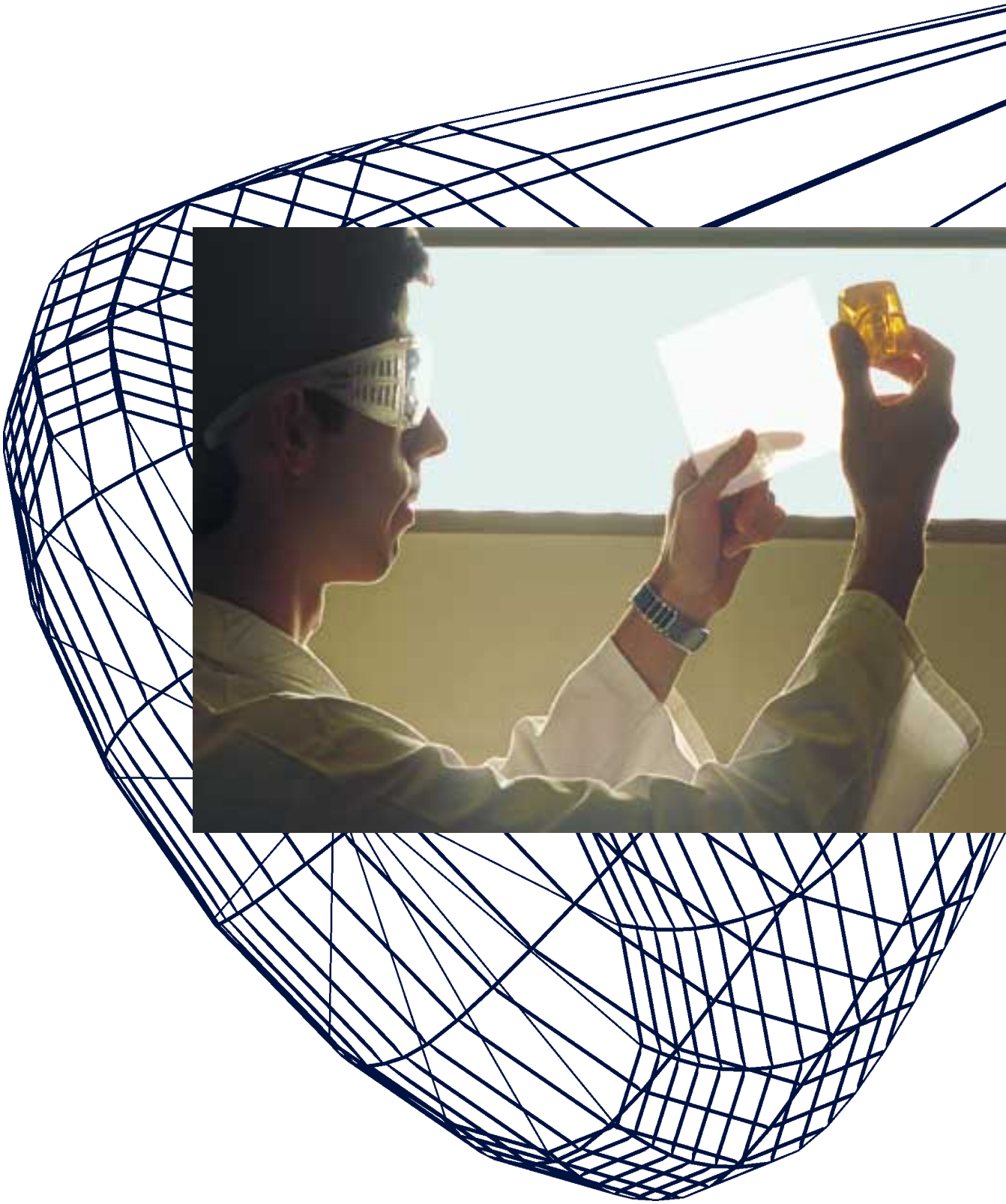

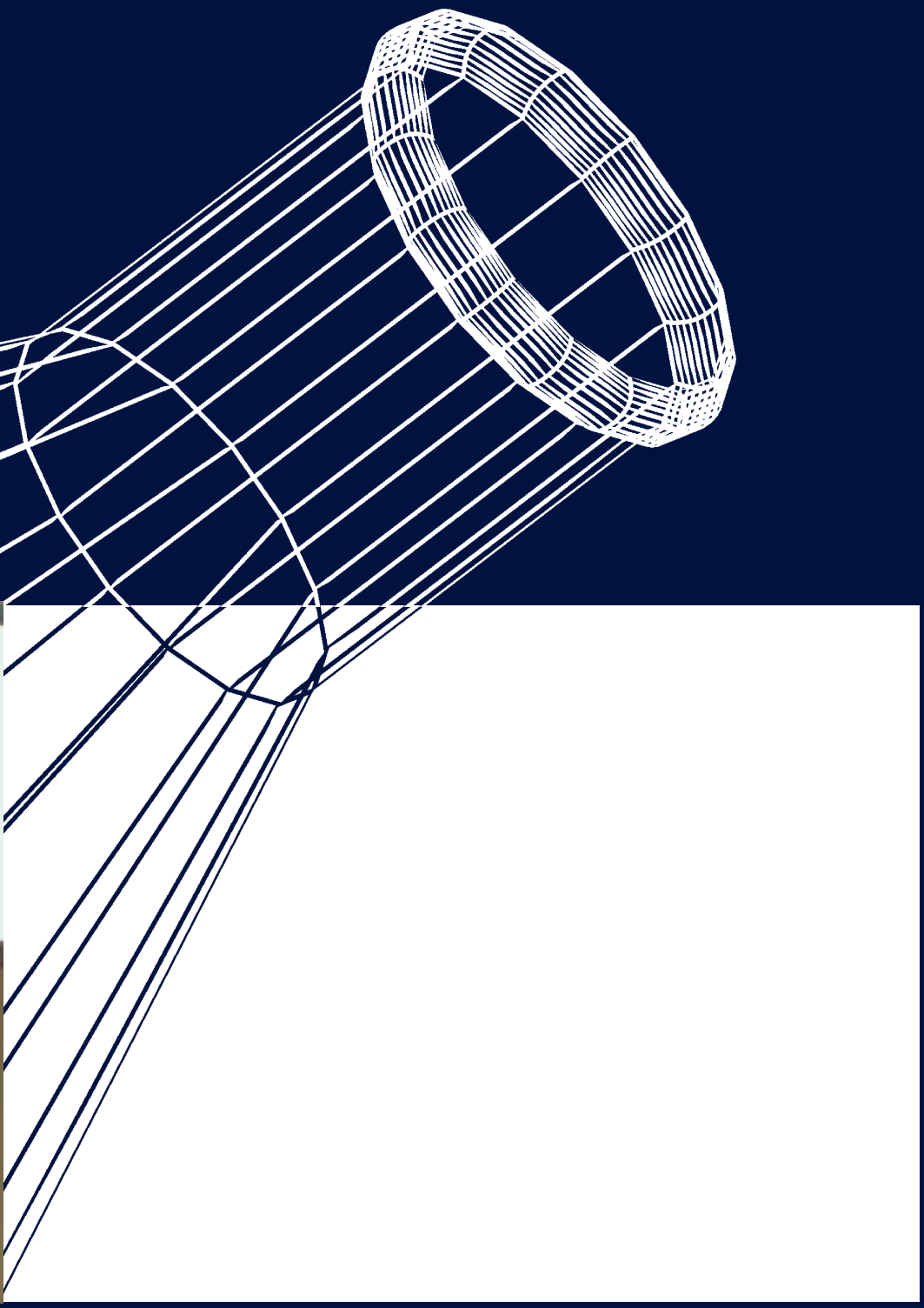

ELEKEIROZ
THE MANAGEMENT'S REPORT

The quantity of products shipped by Elekeiroz during the year was 8% more than in 1999, thus establishing a new record of 334,000 tons. Inorganics totaled 255,000 tons, a growth of 10%, and organics, 79,000 tons or an increase of 4%.

ELEKEIROZ
THE MANAGEMENT'S REPORT

Capital expenditure at Elekeiroz during the fiscal year 2000 totaled R$ 31.5 million, 40% of which was financed by the Brazilian Development Bank – BNDES. These investments increased the annual installed production capacity to 374,000 tons.

Among the most important investments are (1) the duplication and automation of the maleic anhydride plant, (2) the installation of the second turbo-generator, which will enable the company to produce up to 68% of its energy requirements at the Várzea Paulista industrial complex, (3) the automation of the phthalic anhydride plant, (4) a new pumping station for water supplies, (5) engineering services and the initial stages in the plant expansion for the production of concentrated urea/formaldehyde, (6) the initial phases of the second master plan for implementing information technology to support automated operations in real time and (7) R$ 4.8 million for specific application in the development of technologies for products and processes, principally in relation to rationalization and automation.

During the course of the fiscal year, the Resins Division was set up as a direct consequence of the rationalization and focus process. This Division will have its own independent management, which will provide it with greater flexibility and efficiency in reacting to the needs of its business. The operation received ISO 9002 certification covering the entire development and manufacturing process of polyester resins.

TECHNOLOGICAL DEVELOPMENT

Itaúsa Group's chemical complex has always pursued to the letter a policy of quality, the principal guidelines of which include the continual upgrading of performance to ensure the continuity and expansion of the businesses in the segments in which the company operates. The company is also guided by the need to maximize its competitive edge through the appropriate technical and management training of its employees, thus guaranteeing the commitment to the constant improvement in product quality required by the customers.

At Elekeiroz, all the necessary technology for a well-performing chemical industry is present in the operation of the eight manufacturing plants, from the raw material stage to the dispatch of the finished items. The production chain involves processing technologies for products and uses (such as resin derivatives); for automation (industrial and corporate). And naturally, the production chain also involves quality – recognized by the ISO 9001 certification in April last year. All 399 employees, comprising the team at the chemical complex, underwent 70,000 hours of training during 2000.

The efficiency gains from the use of modern technologies can be summarized by the final results: increased output (record in 2000) and productivity. Among Elekeiroz's achievements in 2000, worthy of special mention, is the structuring of the first pilot business unit, the Resins Division, which assumed responsibility for own independent management. The operation received the ISO 9002 certification of quality for the entire development and manufacturing process of resins and polyester.

Elekeiroz has the only maleic anhydride plant in Brazil and the entire production process is technologically self-sufficient. In 2000, there were no production stoppages during the duplication and automation of the maleic plant, while the phthalic anhydride plant was also automated during 2000.

Among other investments, those used to develop processing and product technologies (principally rationalization and automation) will be reflected in future company results.

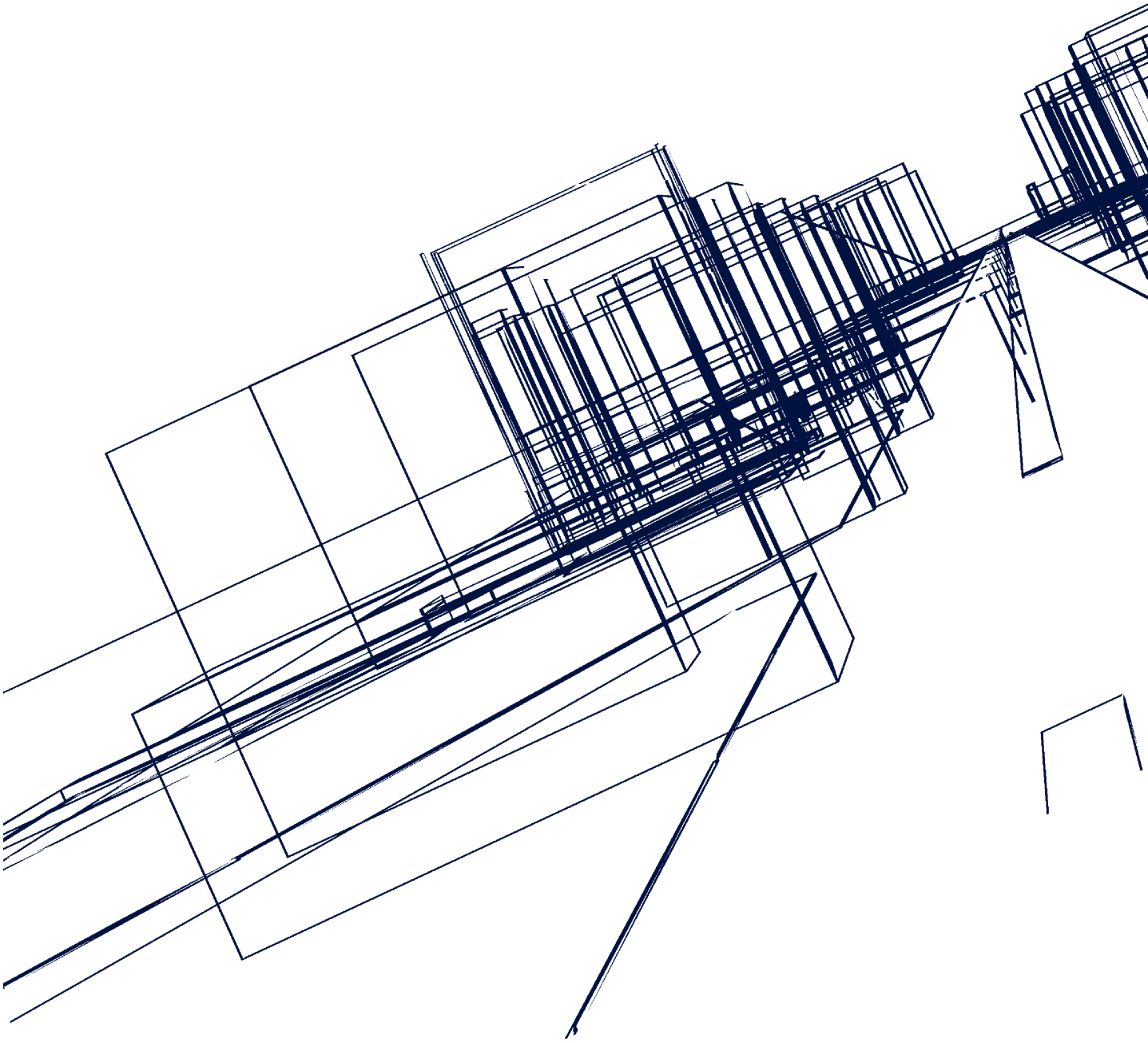

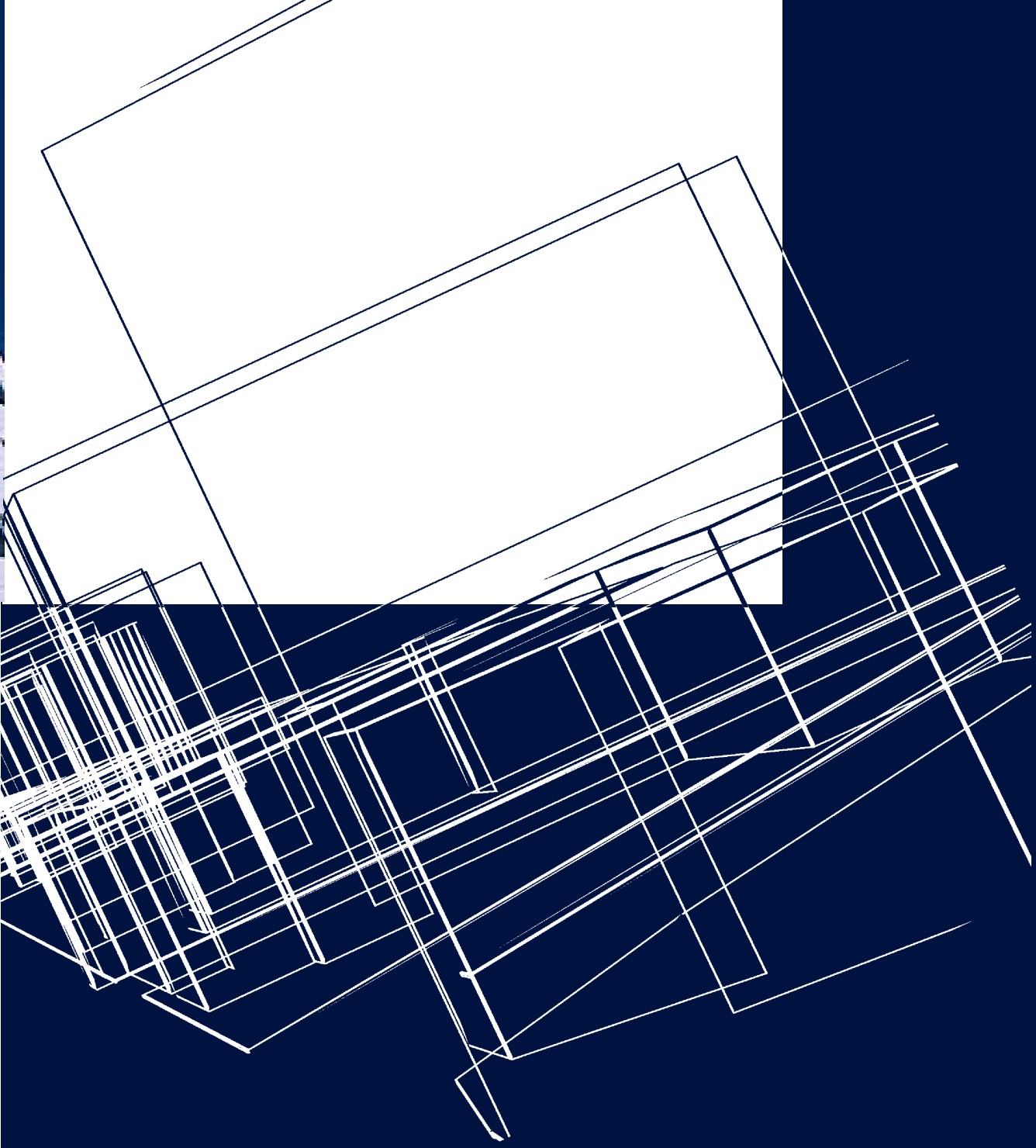

ITAÚSA EMPREENDIMENTOS
THE MANAGEMENT'S REPORT

Real Estate Area
Itaúsa Empreendimentos

In the second half of 2000, Itaúsa Empreendimentos delivered *Transamérica Towers Nações Unidas*, a building consisting of 143 full-service apartments developed in partnership with Camargo Corrêa Desenvolvimento Imobiliário Ltda. and Vera Cruz Empreendimentos Imobiliários Ltda.

ITAÚSA EMPREENDIMENTOS
THE MANAGEMENT'S REPORT

The construction of Panamerica *Park*, developed in partnership with Hines do Brasil, *is* transforming the appearance of the area in which it is being built. The project consists of 9 office blocks on a site of more than 40,000 square meters. The building method that is being used is a pioneering one, providing the construction with industrial quality as well as accelerated execution. The first stage of the development will be delivered in March 2001 and completion is planned for August 2001. The new project was well received by the real estate market and this has already guaranteed the rental of two buildings still in the phase of completion.

Raposo Shopping posted revenues that were 36% higher than 1999. This result amply justifies the investment made in the restoration of the Shopping Center so far and supports the continued program of refurbishment in 2001.

TECHNOLOGICAL DEVELOPMENT

In its activities as a developer, the focus of which is contract management, Itaúsa Empreendimentos is specialized in the development of urban real estate projects. The skills of the company in this business can literally be seen in the company's most recent enterprise, that of the Panamérica Park, a group of nine office blocks on a single site at Av. Marginal, the ring road running alongside the Pinheiros River in the city of São Paulo. The project has been developed in record time in partnership with Hines and CB Richard Ellis. Begun in June 2000, by December 31, 2000, 6.5 units had been constructed. The project is to be concluded by the beginning of the second half of 2001. This accelerated rhythm has been made possible given the prefabricated nature of the construction, the façade of the buildings also being a structural element.

HUMAN RESOURCES
THE MANAGEMENT'S REPORT

HUMAN RESOURCES
THE MANAGEMENT'S REPORT

The Itaúsa group employed 58,850 at the end of 2000. Total remuneration including labor charges and benefits was R$ 2,789.1 million. The variable portion of this amount (participation in profits or results, commissions, bonuses) was R$ 159.3 million.

The social benefits conceded to employees and their dependents include complementary pensions, food vouchers, medical assistance and dental care, welfare service, scholarships, leisure, sporting and cultural activities, loans at subsidized rates, insurance, travel vouchers, contributions and special concessions among others.

These benefits amount to R$ 405.2 million, of special importance being the Complementary Pension Plan offered by the Itaubanco Foundation, Duratex Foundation and Aricanduva Previdência, the three of which are already paying pensions worth R$ 67.4 million to 5,462 retired employees.

One of the fundamental objectives of the Itaúsa conglomerate is the improvement of employee skills as a means to face the constant challenges presented

by the market. This process forms the basis for the technological innovation, the importance of which is always reaffirmed by the companies in the conglomerate. The improvement in skills is also the basis for standards of quality and excellence underlying the operations of the entire group. In 2000, the companies invested R$ 35.1 million in educational, training and development programs.

Attracting, developing and retaining talents are the order of the day at Banco Itaú. In 2000 alone, the Bank hired 572 graduates selected from the best Brazilian universities. Itaú has also awarded more than two thousand scholarships for graduation, post-graduation and university extension courses both in Brazil and overseas.

In 2000, Duratex offered training facilities to more than 32,000 people, an investment of R$ 2.6 million, with the object of obtaining a qualification or increasing professional skills not only for the benefit of its own employees but also its outside partners including plumbers, carpenters and Durafloor installers.

PREFEITURA DO RIO

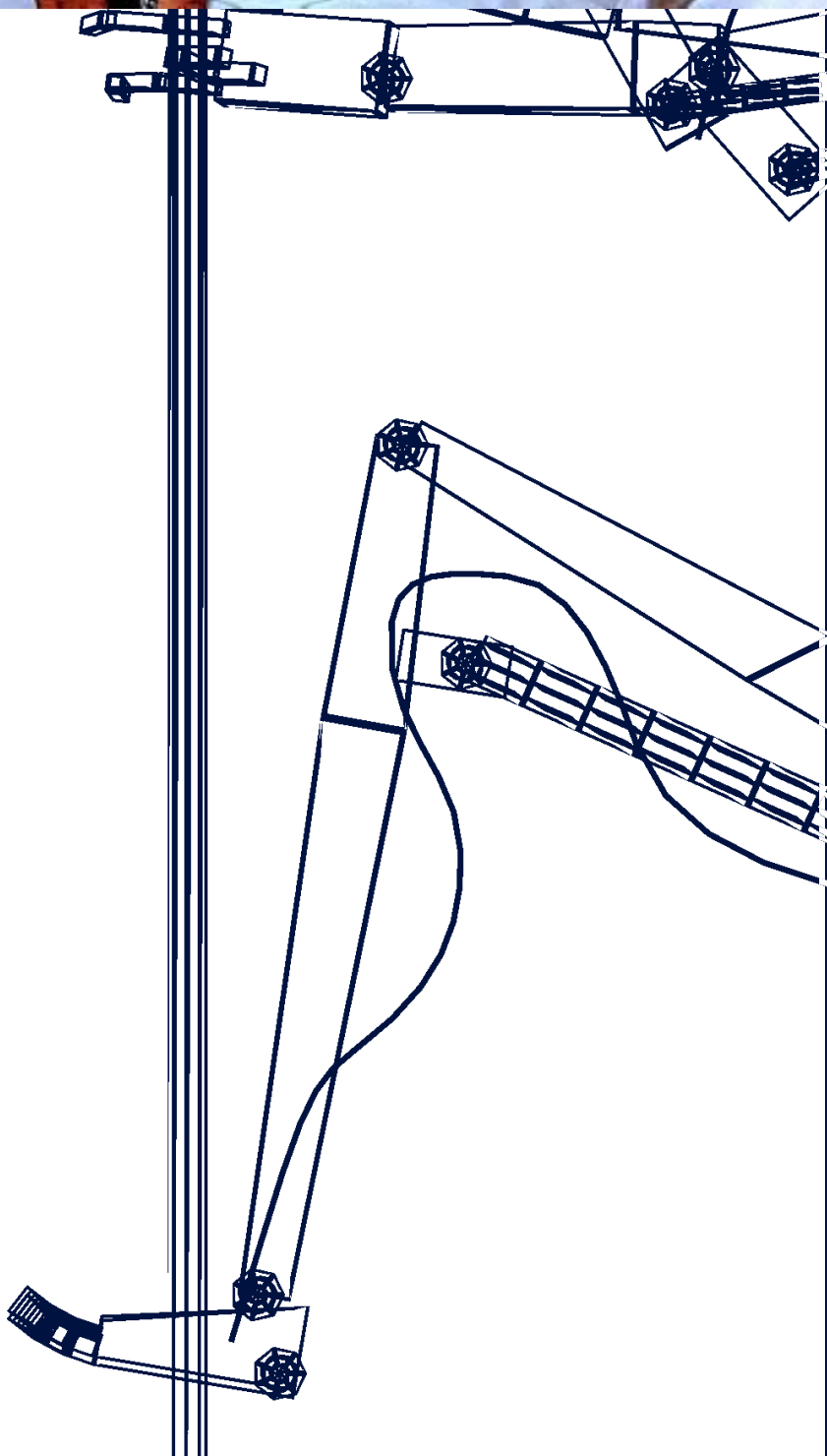

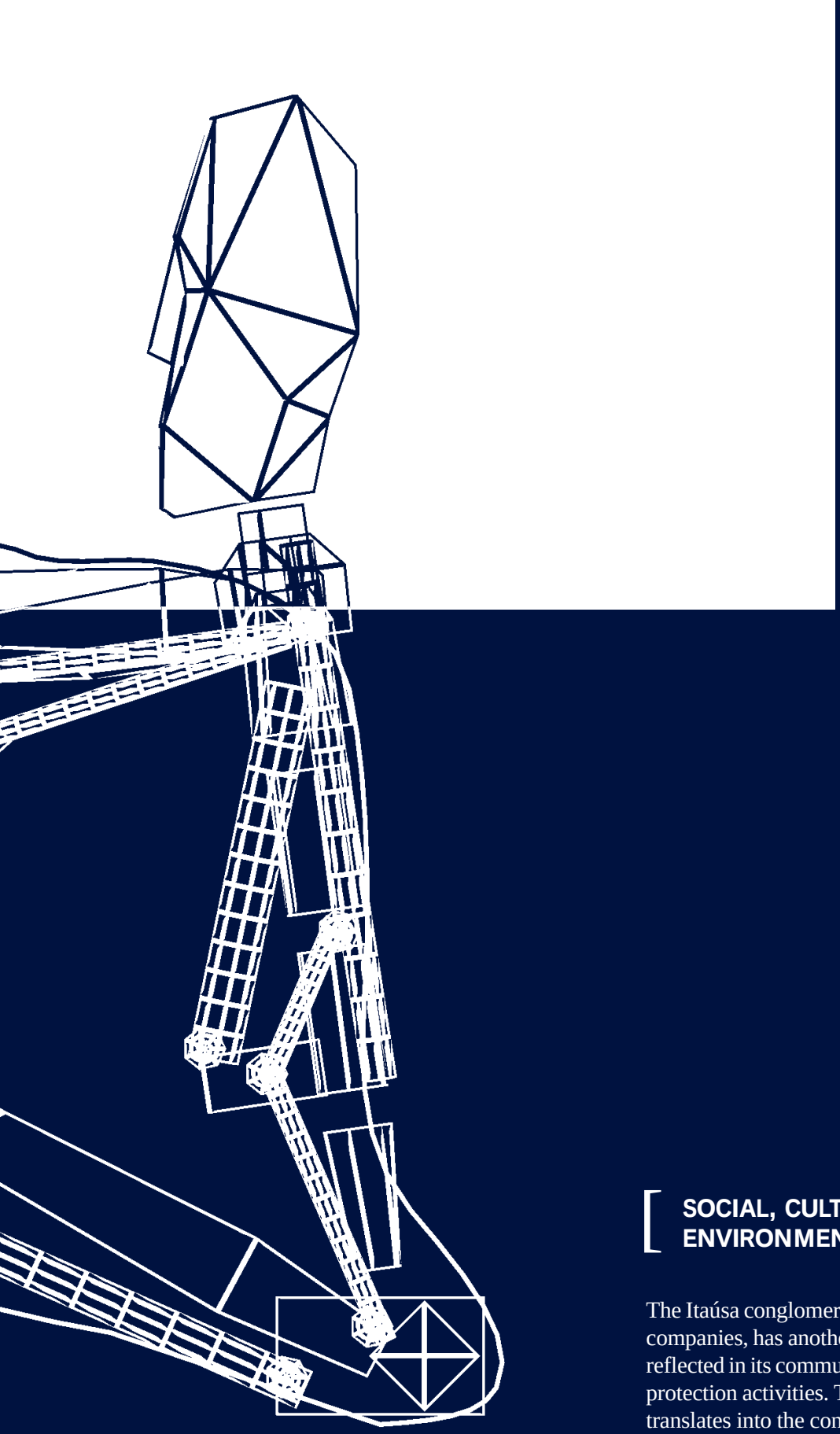

SOCIAL, CULTURAL AND ENVIRONMENTAL ACTIVITIES

The Itaúsa conglomerate, through its subsidiary companies, has another fundamental value, which is reflected in its community and environmental protection activities. The best expression of this value translates into the concept of "entrepreneurial citizenship",which the group practices.

The group's companies paid or provisioned R$ 1,967.9 million in taxes and contributions on income, revenues and payroll. Additionally, R$ 3,112.4 million was withheld in taxes and contributions directly on financial intermediation or retained on behalf of clients.

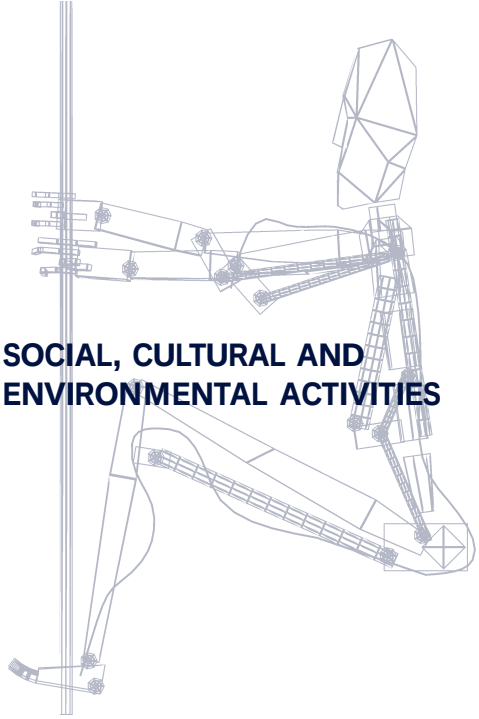

SOCIAL, CULTURAL AND ENVIRONMENTAL ACTIVITIES

Itaú Social Program

In 2000, the Itaú Social Foundation was set up with assets of R$ 170 million for the purpose of providing support to the group's community programs. In 2000 alone, R$ 11 million was invested in 185 projects of a social nature.

Among these, the most worthy of mention are (1) the *Regional Educators Meetings*, the objective of which is to train the members comprising the entities participating in the *Itaú-Unicef Prize*; (2) *The Partnership Program*, created and implemented by Itaú and Unicef in 2000, for the purpose of providing technical and financial support to 30 projects developed by the finalists in the Itaú-Unicef Prize 1999 award: (3) the *Improvement of Education in the Municipality Project*, for technical staff working in the municipal education secretariats, among other entities with approximately 32,000 professionals and 700,000 students taking part in the project during 2000.

In the last five years, 50,000 educational kits of the *Roots and Wings Project* were distributed to state schools, these events also being aired on the Educational TV channels.

Itaú continued to provide financial support to the *Training* and *Literacy Solidarity* programs, and the *Speak up Brazil Program*, run by the Ministry of Education and the *Futura TV Channel* in partnership with 15 other major corporations and institutions.

In the area of health care, Itaú Social, has implemented the *Health and Citizenship Project*, which involves the publication and distribution of training material for municipal health care agents. Itaú Social has also been providing support for the project for constructing hospitals and the acquisition and installation of medical and hospital equipment among other related items

Itaú Cultural Institute

In the cultural field, the Itaú Cultural Institute, founded thirteen years ago, continues to consolidate its reputation as a benchmark in the production and publishing of cultural information in the form of products, events and various types of artistic exhibitions. This outstanding position was achieved thanks to a policy of coherent and constant activities, which currently combine two distinct forms.

On the one hand, Itaú Cultural promotes a process of prospective actions, whereby it surveys artistic productions throughout the country for the purposes of revealing new talent and then assisting in the development and publishing of the artists' work.
On the other hand, retrospective actions, within the field coordinated by the Institute's governors – thematic guidelines that establish its annual program of activities –, guarantee the renovation, preservation and dissemination of the cultural heritage in Brazilian society.

Itaú Cultural's Figures in 2000
• 219,756 visitors
• 863,868 visits to *site*
• 20,833 products distributed
• 2,949 cultural and teaching institutions received products from Itaú Cultural
• 145 cultural product titles available for distribution
• 47 contractual agreements with other institutions
• 38 institutions receiving support and/or via partnerships
• 152 presentations and workshops
• 35 exhibitions
• 43 shows
• 135 cinema and video shows
• 10 awards received for work in various areas

Itaú Numismatics - Herculano Pires Musem

Itaú Numismatics – Herculano Pires Museum, inaugurated in October 2000, houses Banco Itaú's numismatic collection which focuses on currencies of Portuguese/ Brazilian origin with about 5,000 coins, 500 medals and 20 award decorations.

The Museum aims to provide the public with an entertaining pastime through a cultural leisure pursuit with a historical and numismatic content. It also seeks to satisfy the interests of not only a non-specialist public, but also the experts in the subject, attracting visitors, both from the point of view of the beauty of the architectural project, in which the collection is contained, as well as the quality and precious nature of the collection itself.

The Museum's installations use the latest in museum technology and cataloging, based on observation and analysis of 14 important museums of the same type overseas.

Itaú Numismatics is structured around 30 showcases comprising 15 thematic and chronological modules, covering the 500 years of Brazilian History complete with illustrations of the Brazilian urban landscape and music of the period. To further enrich the visit, the public is invited to view a video that encapsulates the History of the Country through the intermediary of its coins.

Environmental Activities

Investments made in environmental management and in the purchase of equipment for protecting the environment totaled R$ 9.1 million. Particularly noteworthy was the R$ 8.2 million, which Duratex invested in equipment, treatment and disposal of waste, such as Stations for the Treatment of Effluents *(Estações de Tratamento de Efluentes – ETEs*), among others.

Duratex was also recertified for the management of its forests located at its Botucatu, Lençóis Paulista and Agudos plants, clear evidence of the company's concern for the correct use of natural resources. The company runs the Piatan Nature Reserve Area in Agudos-SP, which last year received more than 6,000 visitors.

ADMINISTRATIVE COUNCIL AND BOARD OF MANAGEMENT

Administrative Council

Chairman
Eudoro Villela

Vice-Chairman
José Carlos Moraes Abreu

Counselors
Alfredo Egydio Arruda Villela Filho
Luiz de Moraes Barros
Olavo Egydio Setubal
Paulo Setubal

Board of Management

President
Olavo Egydio Setubal

Director-General
José Carlos Moraes Abreu

Executive Vice-Presidents
Jairo Cupertino
Roberto Egydio Setubal

Executive Directors
Henri Penchas
Luiz de Campos Salles

Fiscal Council

President
José Marcos Konder Comparato

Counselors
Geraldo de Camargo Vidigal
João José Caiafa Torres

CORPORATE INFORMATION

Head Office

Praça Alfredo Egydio de Souza Aranha, 100
Torre Itaúsa
CEP 04344-902 - São Paulo-SP
Telephones: (0xx11) 5019-1677, 5019-1678
and 578-5235
Fax: (0xx11) 5019-1114

Investor Relations

Praça Alfredo Egydio de Souza Aranha, 100
Torre Conceição - 12º andar
CEP 04344-902 - São Paulo-SP
Telephone: (0xx11) 5019-1677
Fax: (0xx11) 5019-1114

Stockholder Service

Belo Horizonte-MG
Av. João Pinheiro, 195 - térreo - CEP 30130-180

Brasília-DF
SCS Quadra 3 - Edifício Dona Angela - sobreloja
CEP 70300-500

Curitiba-PR
Rua João Negrão, 65 - CEP 80010-200

Porto Alegre-RS
Rua Sete de Setembro, 746 - sobreloja
CEP 90010-190

Rio de Janeiro-RJ
Rua Sete de Setembro, 99 - subsolo
CEP 20050-005

Salvador-BA
Av. Estados Unidos, 50 - 2º andar
Edifício Sesquicentenário - CEP 40010-020

São Paulo-SP
Rua XV de Novembro, 318 - térreo
CEP 01013-001

Other Localities
Branches of Banco Itaú S.A.

Independent Auditors

KPMG Auditores Independentes
CRC 2SP014428/O-6
Rua Dr. Renato Paes de Barros, 33
04530-904 - São Paulo-SP
Telephone: (0xx11) 3067-3000
Fax: (0xx11) 280-3752

CAPTIONS

Page 10	Detail of printed circuit board - Itaucom
Page 14	Visual communication of Banco Itaú on front of branch.
Page 22	Robot manipulating taps – Duratex's brass bathroom fixtures plant.
Page 32	Philco RealFlat 32" TV.
Page 33	Wafer. In background, equipment for the assembly, welding and encapsulating of printed circuit boards – Itaucom.
Page 42	Analyzing resin at the Elekeiroz Laboratory
Page 46	Detail of *Panamerica Park*, a group of office buildings with completely pre-fabricated construction and whose front is also a structural element.
Page 50	Speech to Banco Itaú executives.
Page 54	Children taking part in one of the educational programs supported by Banco Itaú.
Page 56	Itaú Cultural Encyclopedia of Visual Arts, with about 3,000 biographies of Brazilian artists and 9,000 images of works accessible through the site of the Instituto Itaú Cultural.
Page 57	Products distributed gratuitously by the Instituto Itaú Cultural Itaú Numismática – Museu Herculano Pires, with about 5,000 coins Duratex shoot nursery.

Eletronic editing and graphic production
Via Impressa

Photos
Ivson
Eduardo Barcelos - page 15
João Musa - page 57 (shoot nursery)
Arquivo banco Itaú - pages 50 and 54

Photolithography
Marprint

Printing
Pancrom

ITAÚSA